2017 KLX®110L

PARTS DIAGRAM

Generator

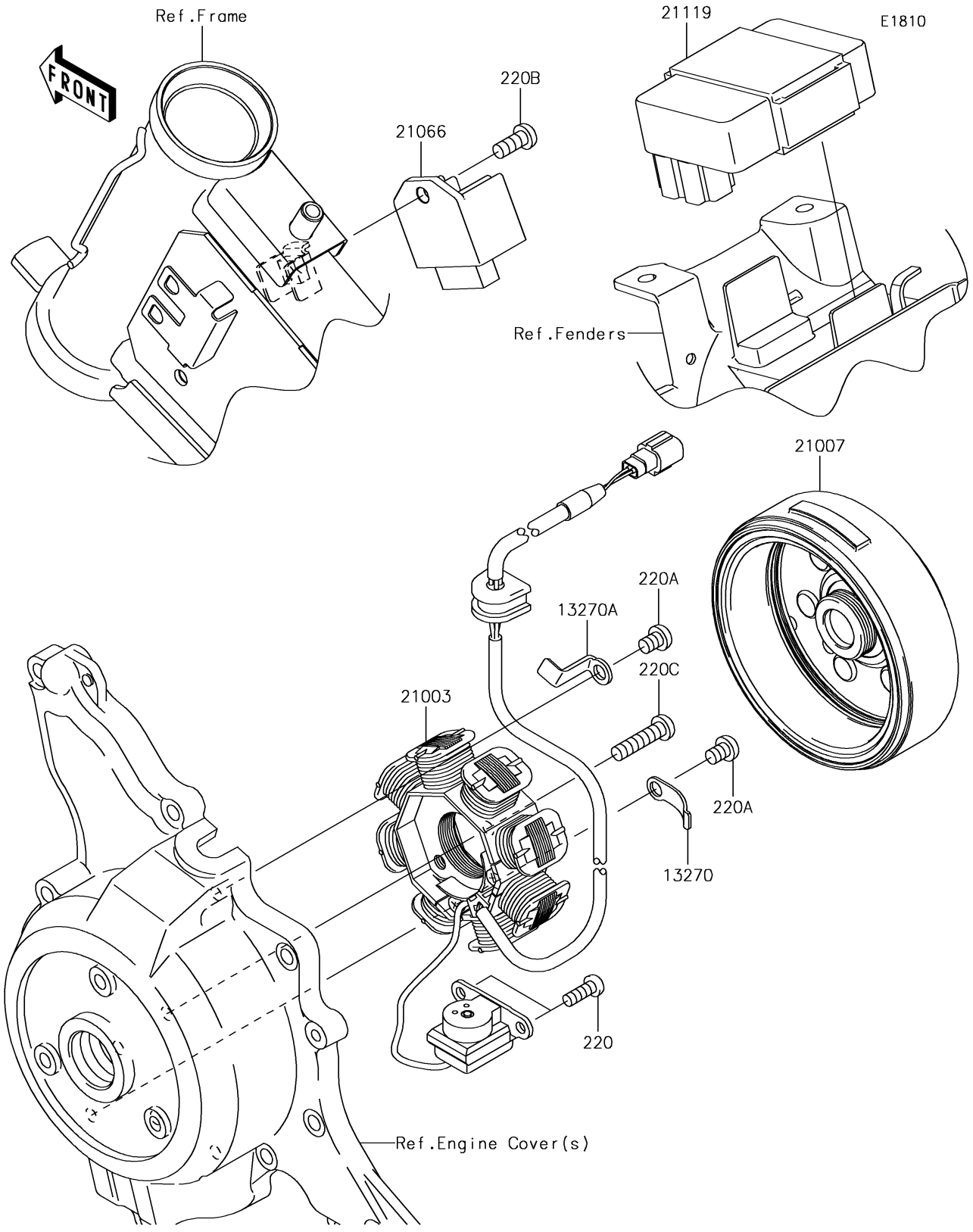

© 2026 Kawasaki Motors Corp., U.S.A.

2017 KLX®110L

PARTS LIST

Generator

ITEM NAME	PART NUMBER	QUANTITY
PLATE (Ref # 13270)	13270-1754	1
PLATE (Ref # 13270A)	13270-1961	1
STATOR (Ref # 21003)	21003-0097	1
ROTOR (Ref # 21007)	21007-0137	1
REGULATOR-VOLTAGE (Ref # 21066)	21066-0046	1
IGNITER (Ref # 21119)	21119-0102	1
SCREW-PAN-CROS,5X14 (Ref # 220)	220AA0514	2
SCREW-PAN-CROS,6X8 (Ref # 220A)	220AA0608	2
SCREW-PAN-CROS,6X14 (Ref # 220B)	220AA0614	1
SCREW-PAN-CROS,6X25 (Ref # 220C)	220AA0625	2

© 2026 Kawasaki Motors Corp., U.S.A.