# 2018 KLX®110L

## PARTS DIAGRAM

### Clutch

E1350

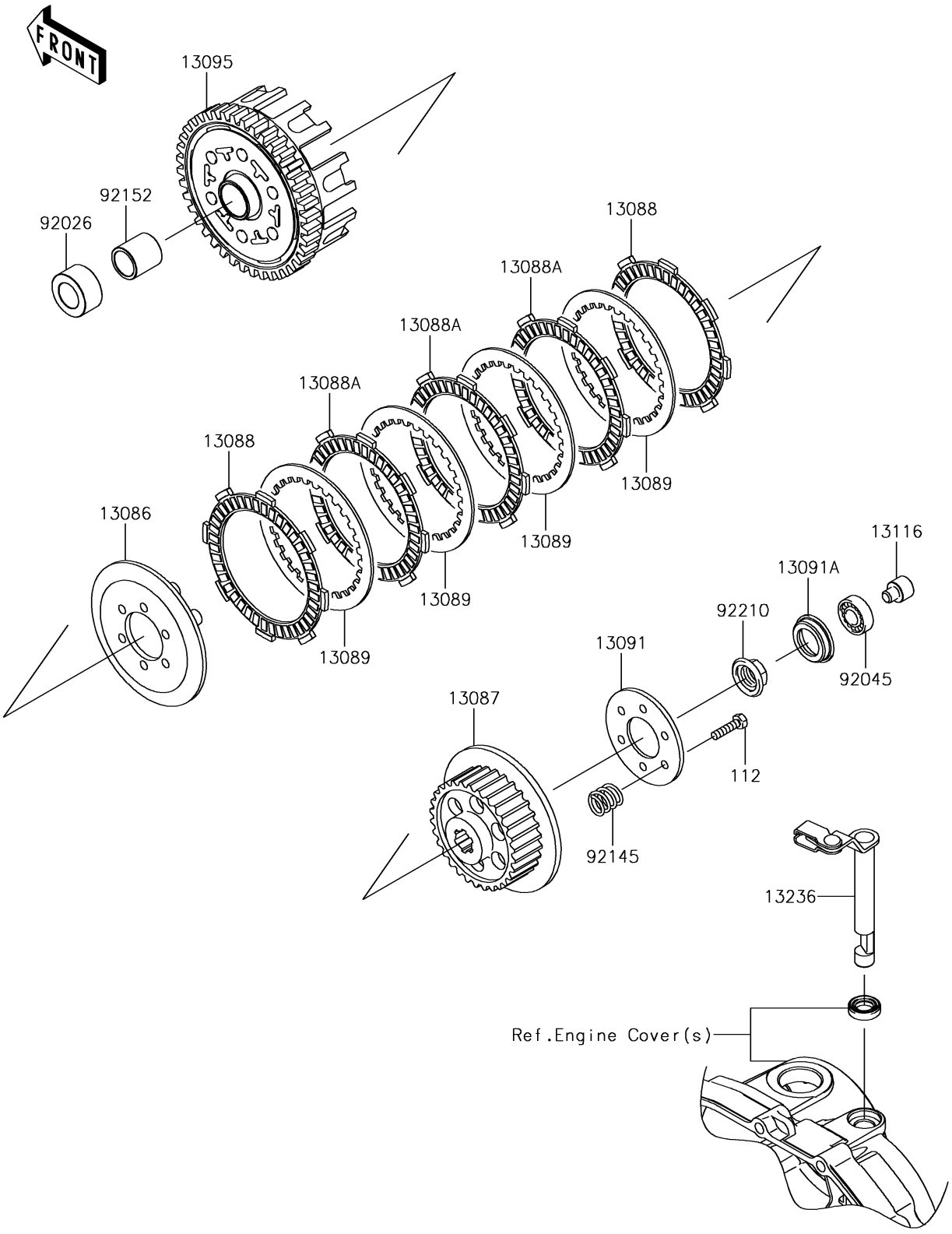


© 2026 Kawasaki Motors Corp., U.S.A.

# 2018 KLX®110L

## PARTS LIST

### Clutch

| ITEM NAME | PART NUMBER | QUANTITY |
|---|---|---|
| BOLT-UPSET,5X20 (Ref # 112) | 112BA0520 | 6 |
| WHEEL-CLUTCH (Ref # 13086) | 13086-1065 | 1 |
| HUB-CLUTCH (Ref # 13087) | 13087-1151 | 1 |
| PLATE-FRICTION (Ref # 13088) | 13088-0047 | 2 |
| PLATE-FRICTION (Ref # 13088A) | 13088-0048 | 3 |
| PLATE-CLUTCH (Ref # 13089) | 13089-1087 | 4 |
| HOLDER,CLUTCH (Ref # 13091) | 13091-1782 | 1 |
| HOLDER (Ref # 13091A) | 13091-1787 | 1 |
| HOUSING-COMP-CLUTCH (Ref # 13095) | 13095-1403 | 1 |
| ROD-PUSH (Ref # 13116) | 13116-0038 | 1 |
| LEVER-COMP (Ref # 13236) | 13236-0177 | 1 |
| SPACER (Ref # 92026) | 92026-1605 | 1 |
| BEARING-BALL,#628 (Ref # 92045) | 92045-1123 | 1 |
| SPRING (Ref # 92145) | 92145-0713 | 6 |
| COLLAR,17X22X22.7 (Ref # 92152) | 92152-0393 | 1 |
| NUT,14MM (Ref # 92210) | 92210-1374 | 1 |

© 2026 Kawasaki Motors Corp., U.S.A.