2018 KLX®110L

PARTS DIAGRAM

Crankshaft

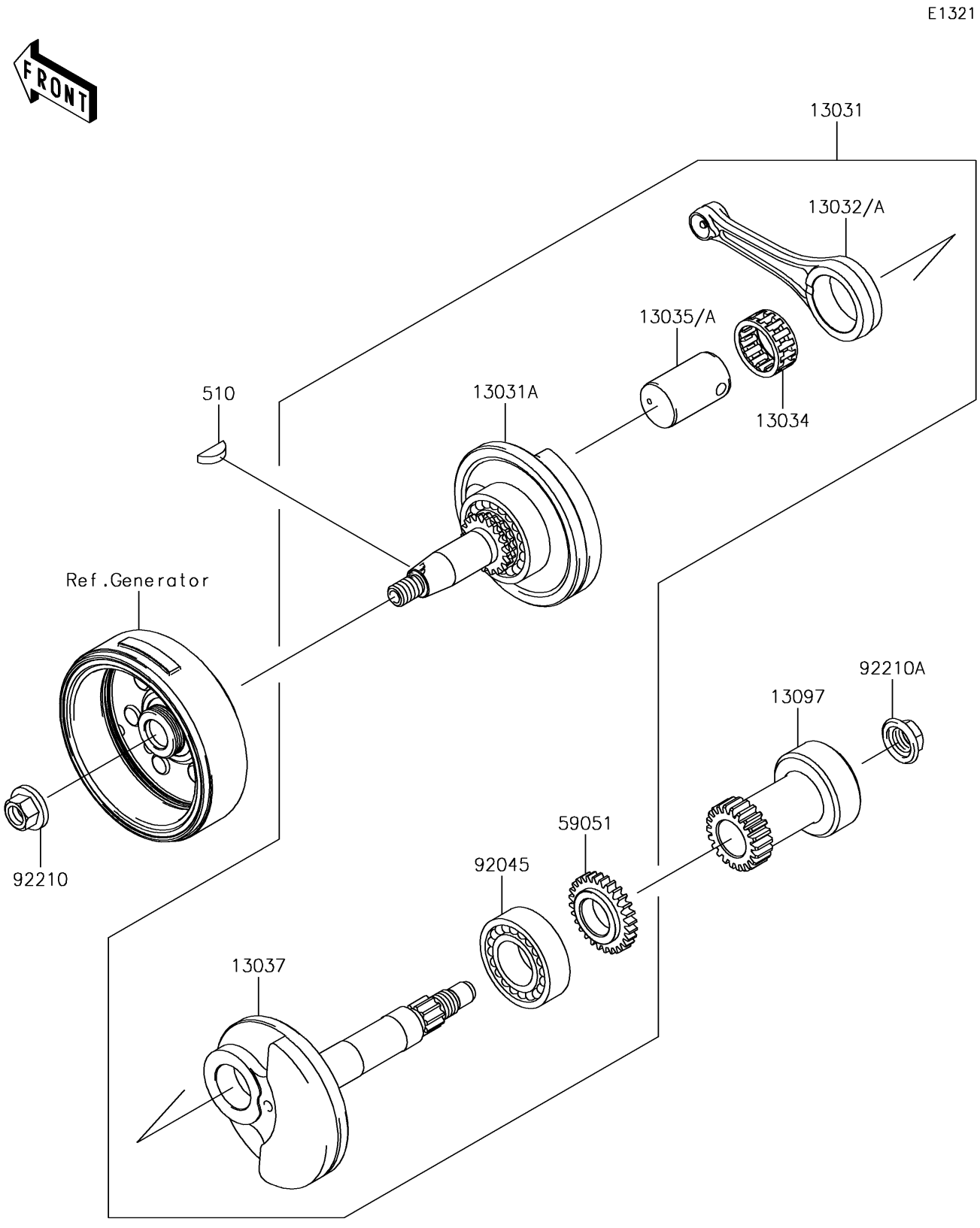

© 2026 Kawasaki Motors Corp., U.S.A.

2018 KLX®110L

PARTS LIST

Crankshaft

ITEM NAME	PART NUMBER	QUANTITY
CRANKSHAFT-COMP (Ref # 13031)	13031-0721	1
CRANKSHAFT-COMP,LH (Ref # 13031A)	13031-0722	1
ROD-CONNECTING (Ref # 13032A)	13032-0749	1
BEARING-BIG END,KT 263314EGC06 (Ref # 13034)	13034-0010	1
PIN-CRANK (Ref # 13035)	13035-0030	1
CRANKSHAFT,RH (Ref # 13037)	13037-0128	1
GEAR-PRIMARY SPUR (Ref # 13097)	13097-0120	1
KEY-WOODRUFF (Ref # 510)	510A3200	1
GEAR-SPUR (Ref # 59051)	59051-1402	1
BEARING-BALL,TMB205CJR2C2 (Ref # 92045)	92045-1293	1
NUT,12MM (Ref # 92210)	92210-0176	1
NUT,14MM (Ref # 92210A)	92210-1374	1

© 2026 Kawasaki Motors Corp., U.S.A.