2017 KLX®110L

PARTS DIAGRAM

Camshaft(s)/Tensioner

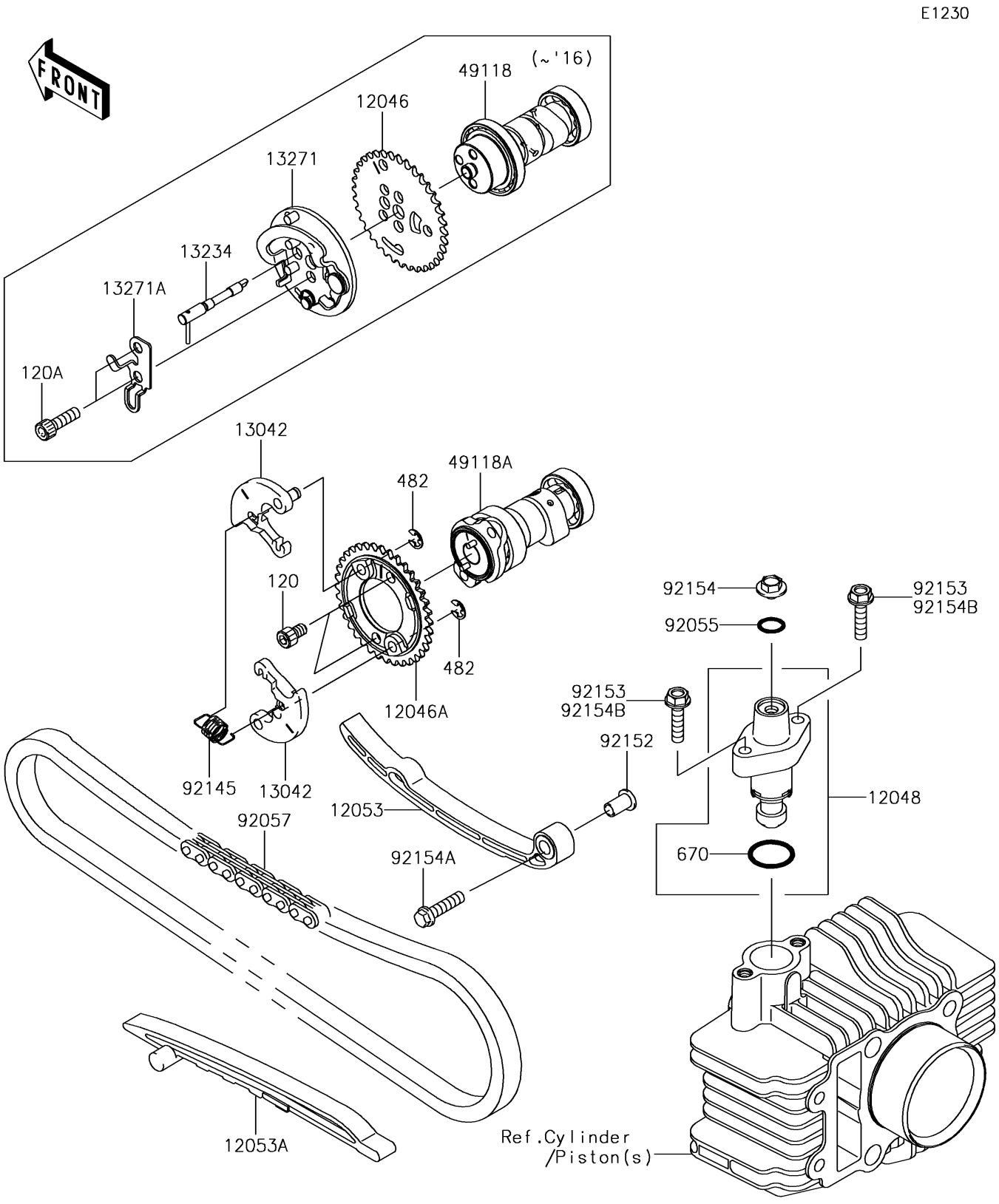

© 2026 Kawasaki Motors Corp., U.S.A.

2017 KLX®110L

PARTS LIST

Camshaft(s)/Tensioner

ITEM NAME	PART NUMBER	QUANTITY
BOLT-SOCKET,6X10 (Ref # 120)	120CA0610	2
SPROCKET,36T (Ref # 12046A)	12046-0591	1
TENSIONER-ASSY (Ref # 12048)	12048-1164	1
GUIDE-CHAIN (Ref # 12053)	12053-0185	1
GUIDE-CHAIN (Ref # 12053A)	12053-1461	1
WEIGHT,DECOMP (Ref # 13042)	13042-1141	2
CIRCLIP-TYPE-E,5MM (Ref # 482)	482J5000	2
CAMSHAFT-COMP (Ref # 49118A)	49118-0880	1
O RING,21MM (Ref # 670)	670D2021	1
RING-O,9.8X2.4 (Ref # 92055)	92055-0060	1
CHAIN,CAM,94L (Ref # 92057)	92057-0610	1
SPRING (Ref # 92145)	92145-0132	1
COLLAR,CHAIN GUIDE (Ref # 92152)	92152-1369	1
BOLT,FLANGED,6X6 (Ref # 92154)	92154-0536	1
BOLT,FLANGED,6X25 (Ref # 92154A)	92154-1156	1
BOLT,FLANGED,6X25 (Ref # 92154B)	92154-1196	2

© 2026 Kawasaki Motors Corp., U.S.A.