2018 KLX®110L

PARTS DIAGRAM

Cylinder Head

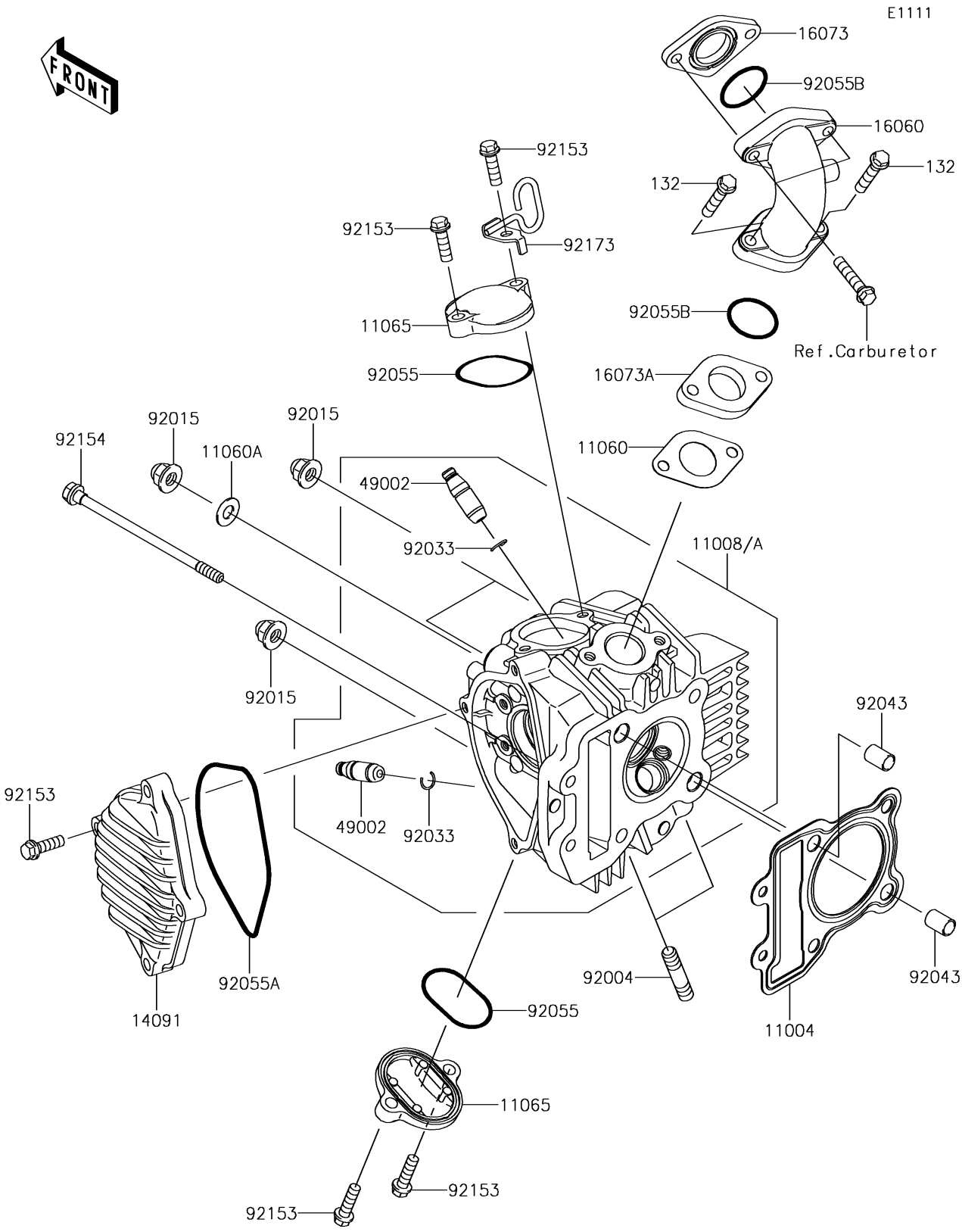

© 2026 Kawasaki Motors Corp., U.S.A.

2018 KLX®110L

PARTS LIST

Cylinder Head

ITEM NAME	PART NUMBER	QUANTITY
GASKET-HEAD (Ref # 11004)	11004-1338	1
HEAD-COMP-CYLINDER (Ref # 11008A)	11008-0890	1
GASKET,INTAKE PIPE (Ref # 11060)	11060-1753	1
GASKET (Ref # 11060A)	11060-1862	1
CAP,VALVE,ADJUSTING (Ref # 11065)	11065-0800	2
BOLT-FLANGED-SMALL,6X30 (Ref # 132)	132BD0630	2
COVER,CAMSHAFT (Ref # 14091)	14091-1447	1
PIPE-INTAKE (Ref # 16060)	16060-0021	1
INSULATOR,CARBURETOR (Ref # 16073)	16073-1102	1
INSULATOR,HEAD (Ref # 16073A)	16073-1108	1
GUIDE-VALVE (Ref # 49002)	49002-0033	2
STUD,8X28.5 (Ref # 92004)	92004-1284	2
NUT,CAP,8MM (Ref # 92015)	92015-1151	4
RING-SNAP (Ref # 92033)	92033-1247	2
PIN,8.2X10X14 (Ref # 92043)	92043-0100	2
RING-O,ADJUST CAP (Ref # 92055)	92055-1231	2
RING-O,91X2.5 (Ref # 92055A)	92055-1527	1
RING-O,25.5X2.0 (Ref # 92055B)	92055-1528	2
BOLT,6X20 (Ref # 92153)	92153-1184	8
BOLT,6X106 (Ref # 92154)	92154-2693	2
CLAMP (Ref # 92173)	92173-0156	1

© 2026 Kawasaki Motors Corp., U.S.A.