2015 KLX®110

PARTS DIAGRAM

Side Covers/Chain Cover

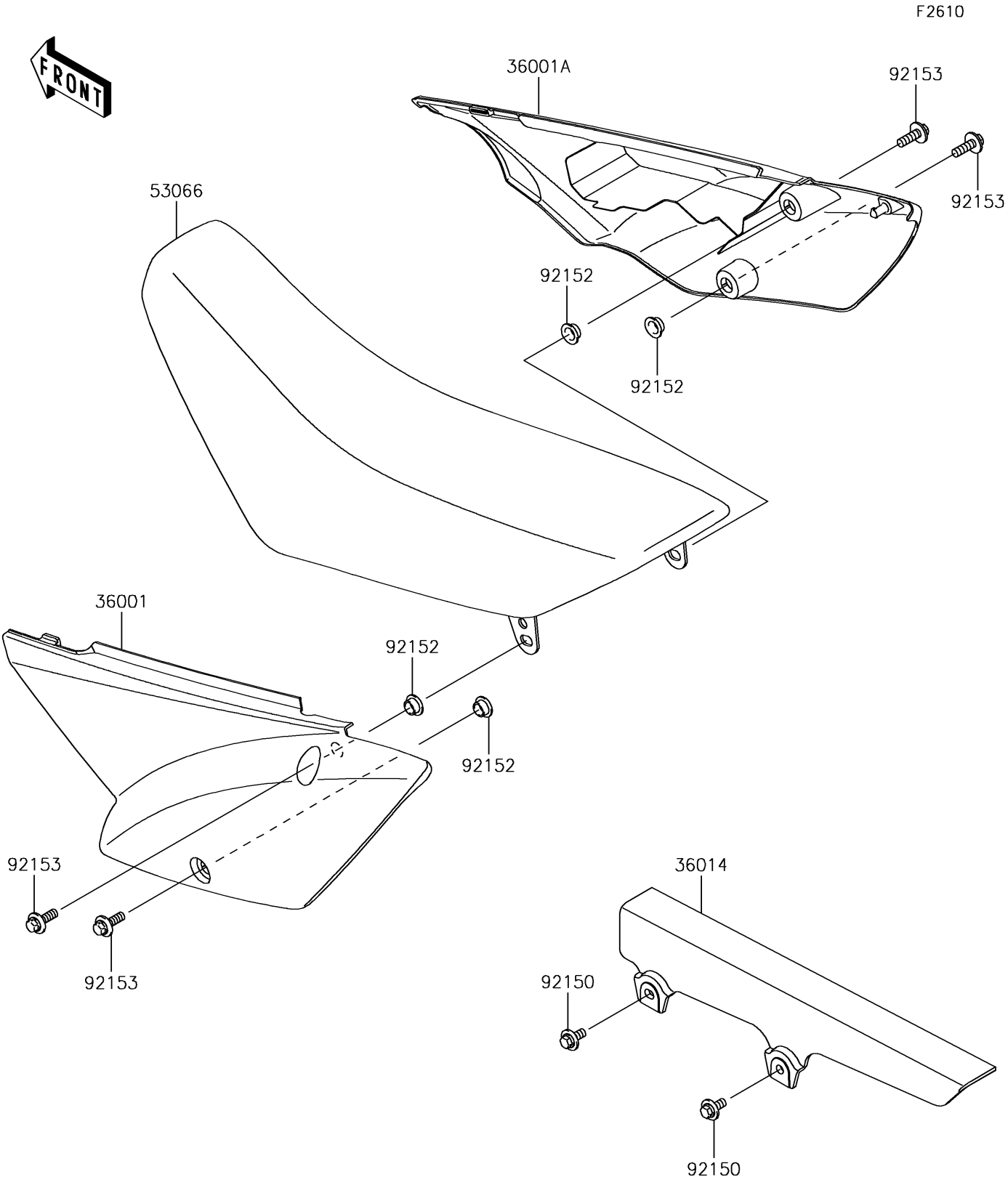

© 2026 Kawasaki Motors Corp., U.S.A.

2015 KLX®110

PARTS LIST

Side Covers/Chain Cover

ITEM NAME	PART NUMBER	QUANTITY
COVER-SIDE,LH,B.WHITE (Ref # 36001)	36001-0204-266	1
COVER-SIDE,RH,B.WHITE (Ref # 36001A)	36001-0205-266	1
CASE-CHAIN (Ref # 36014)	36014-1258	1
SEAT-ASSY,GREEN/BLACK (Ref # 53066)	53066-0456-49F	1
BOLT,FLANGED,6X14 (Ref # 92150)	92150-1689	2
COLLAR (Ref # 92152)	92152-0789	4
BOLT,6X20 (Ref # 92153)	92153-0502	4

© 2026 Kawasaki Motors Corp., U.S.A.