2015 KLX®110

PARTS DIAGRAM

Fuel Tank

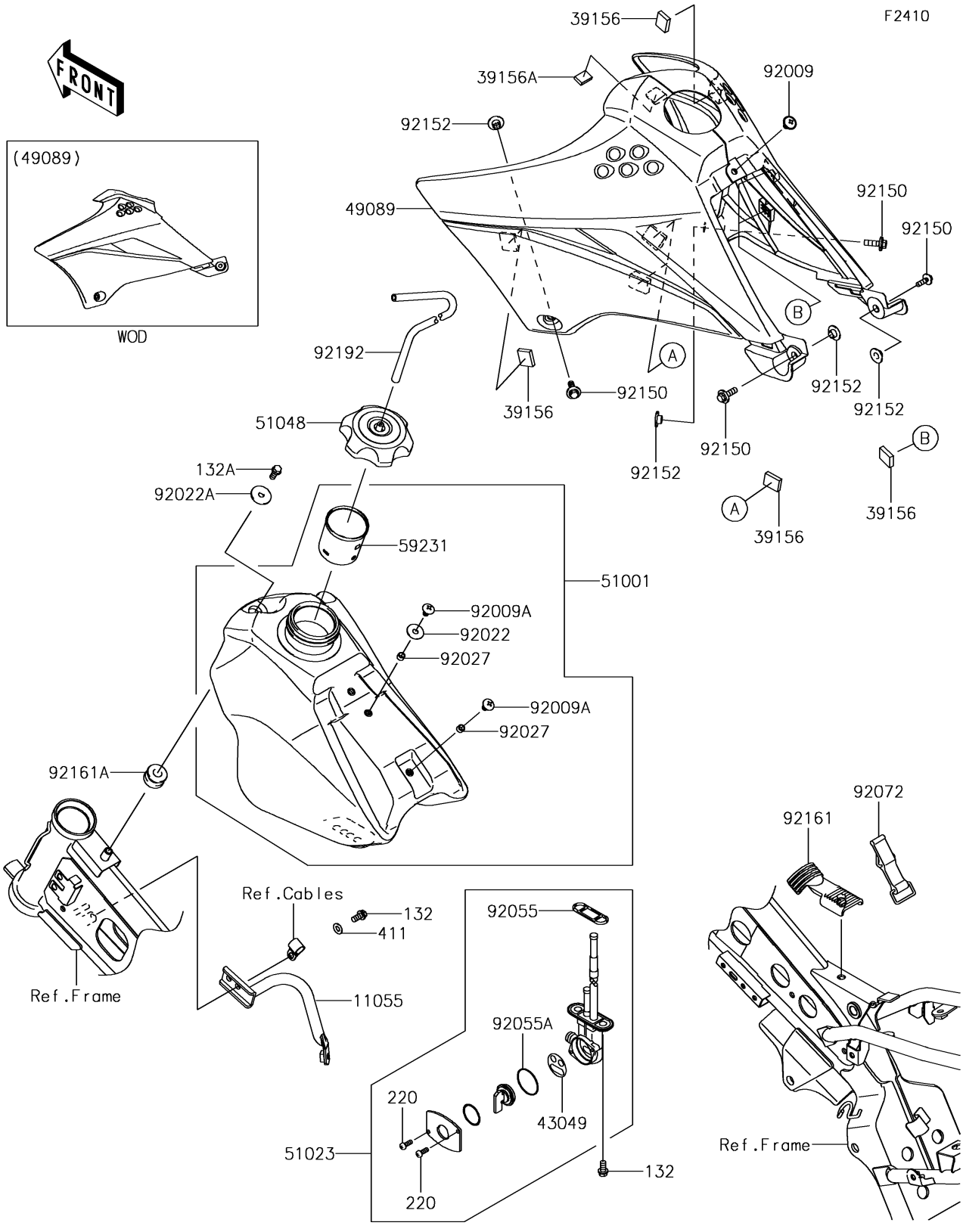

© 2026 Kawasaki Motors Corp., U.S.A.

2015 KLX®110

PARTS LIST

Fuel Tank

ITEM NAME	PART NUMBER	QUANTITY
BRACKET,SHROUD,RH (Ref # 11055)	11055-1636	1
BOLT-FLANGED-SMALL,6X12 (Ref # 132)	132BA0612	3
BOLT-FLANGED-SMALL,6X14 (Ref # 132A)	132BA0614	1
SCREW-PAN-CROS,3X8 (Ref # 220)	220AA0308	2
PAD,16X20X5 (Ref # 39156)	39156-0580	6
PAD,12X17X4 (Ref # 39156A)	39156-0581	1
WASHER-PLAIN,6MM (Ref # 411)	411AA0600	1
PACKING,TAP VALVE (Ref # 43049)	43049-1091	1
SHROUD-ENGINE,L.GREEN (Ref # 49089)	49089-0081-290	1
TANK-COMP-FUEL (Ref # 51001)	51001-0821	1
TAP-ASSY (Ref # 51023)	51023-0041	1
CAP-ASSY-TANK,FUEL (Ref # 51048)	51048-0009	1
FILLER (Ref # 59231)	59231-0051	1
SCREW,6X10,WHITE (Ref # 92009)	92009-1286	1
SCREW,6X10 (Ref # 92009A)	92009-1530	2
WASHER,PLAIN,6.5X20X1 (Ref # 92022)	92022-165	1
WASHER,6.5X24X2 (Ref # 92022A)	92022-1690	1
COLLAR,6.2X7.8X5 (Ref # 92027)	92027-2096	2
RING-O,FUEL TAP PACKING (Ref # 92055)	92055-1112	1
RING-O,TAP LEVER (Ref # 92055A)	92055-1419	1
BAND,FUEL TANK (Ref # 92072)	92072-1229	1
BOLT,FLANGED,6X20 (Ref # 92150)	92150-1339	4
COLLAR (Ref # 92152)	92152-0427	4
DAMPER,FUEL TANK (Ref # 92161)	92161-0779	1
DAMPER (Ref # 92161A)	92161-1523	1
TUBE,5X8X380 (Ref # 92192)	92192-0884	1

© 2026 Kawasaki Motors Corp., U.S.A.