2015 KLX®110

PARTS DIAGRAM

Handlebar

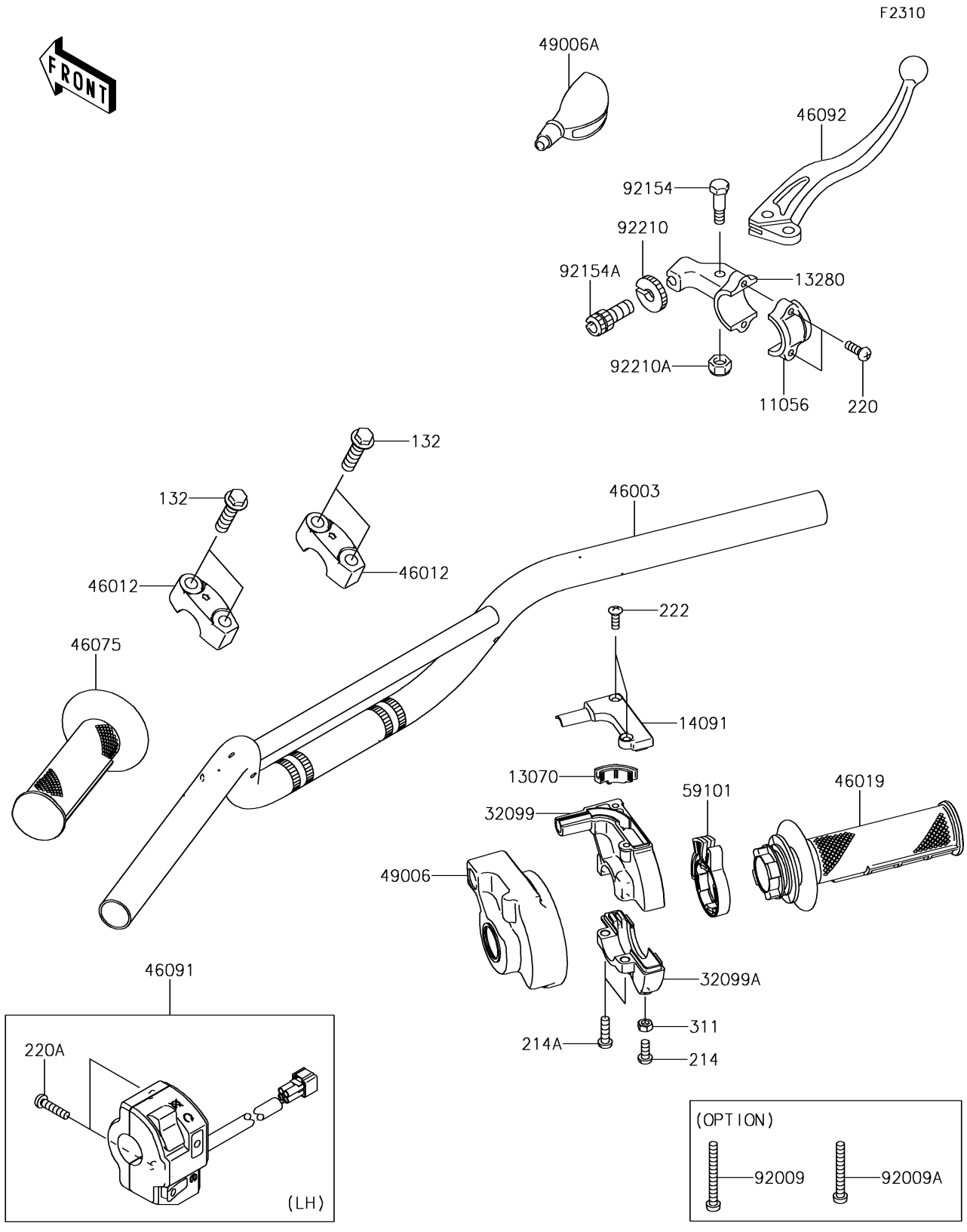

© 2026 Kawasaki Motors Corp., U.S.A.

2015 KLX®110

PARTS LIST

Handlebar

ITEM NAME	PART NUMBER	QUANTITY
BRACKET,LEVER HOLDER (Ref # 11056)	11056-0150	1
GUIDE,THROTTLE (Ref # 13070)	13070-0083	1
BOLT-FLANGED-SMALL,8X30 (Ref # 132)	132BA0830	4
HOLDER,BRAKE LEVER (Ref # 13280)	13280-0362	1
COVER,THROTTLE CASE,UPP (Ref # 14091)	14091-0873	1
SCREW-PAN+-,5X12 (Ref # 214)	214AB0512	1
SCREW-PAN+-,5X18 (Ref # 214A)	214AB0518	2
SCREW-PAN-CROS,5X14 (Ref # 220)	220AA0514	2
SCREW-PAN-CROS,5X22 (Ref # 220A)	220AB0522	2
SCREW-CSK-RD-CROS,4X12 (Ref # 222)	222AB0412	2
NUT-HEX,5MM (Ref # 311)	311AB0500	1
CASE,THROTTLE,UPP (Ref # 32099)	32099-0037	1
CASE,THROTTLE,LWR (Ref # 32099A)	32099-0045	1
HANDLE,P.SILVER (Ref # 46003)	46003-0175-458	1
HOLDER-HANDLE,UPP,P.SILVER (Ref # 46012)	46012-0101-458	2
GRIP-ASSY,THROTTLE (Ref # 46019)	46019-0023	1
GRIP,LH (Ref # 46075)	46075-0072	1
HOUSING-ASSY-CONTROL,LH (Ref # 46091)	46091-0226	1
LEVER-GRIP,BRAKE (Ref # 46092)	46092-0037	1
BOOT,THROTTLE CASE (Ref # 49006)	49006-0075	1
BOOT,LEVER HOLDER (Ref # 49006A)	49006-1017	1
REEL,THROTTLE (Ref # 59101)	59101-0005	1
SCREW,5X47 (Ref # 92009)	92009-1989	1
SCREW,5X42 (Ref # 92009A)	92009-1998	1
BOLT,LEVER SET (Ref # 92154)	92154-0329	1
BOLT,CABLE ADJUSTER (Ref # 92154A)	92154-0330	1
NUT (Ref # 92210)	92210-0593	1
NUT,LOCK,6MM (Ref # 92210A)	92210-0594	1

© 2026 Kawasaki Motors Corp., U.S.A.