2015 KLX®110

PARTS DIAGRAM

Engine Mount

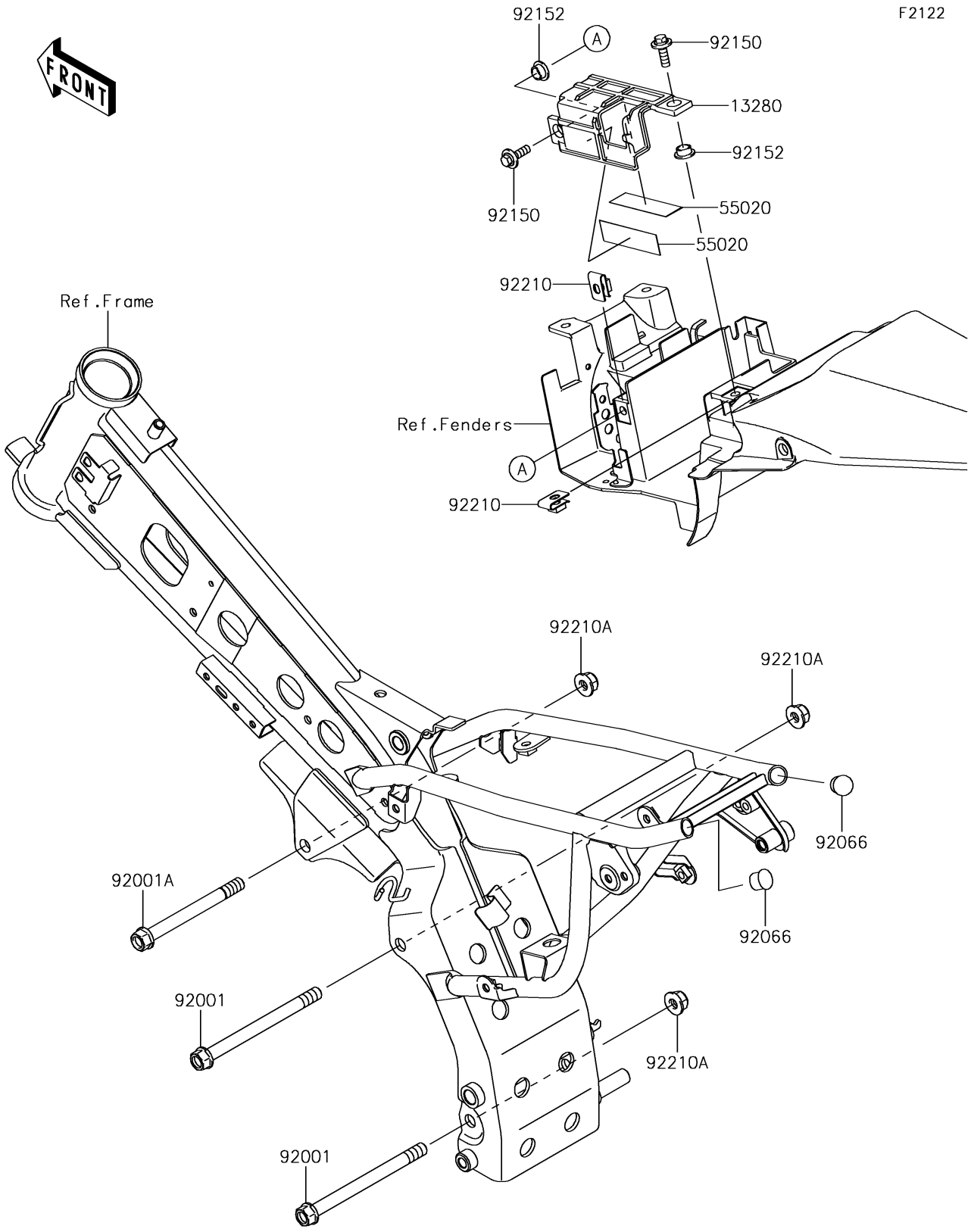

© 2026 Kawasaki Motors Corp., U.S.A.

2015 KLX®110

PARTS LIST

Engine Mount

ITEM NAME	PART NUMBER	QUANTITY
HOLDER,BATTERY (Ref # 13280)	13280-0384	1
GUARD (Ref # 55020)	55020-0527	2
BOLT,FLANGED,10X125 (Ref # 92001)	92001-1720	2
BOLT,FLANGED,10X105,BLACK (Ref # 92001A)	92001-1751	1
PLUG (Ref # 92066)	92066-1081	2
BOLT,FLANGED,6X20 (Ref # 92150)	92150-1339	2
COLLAR (Ref # 92152)	92152-0789	2
NUT,6MM (Ref # 92210)	92210-0218	2
NUT,LOCK,FLANGED,10MM (Ref # 92210A)	92210-1081	3

© 2026 Kawasaki Motors Corp., U.S.A.