# 2002 Prairie 300

## PARTS DIAGRAM

### Generator

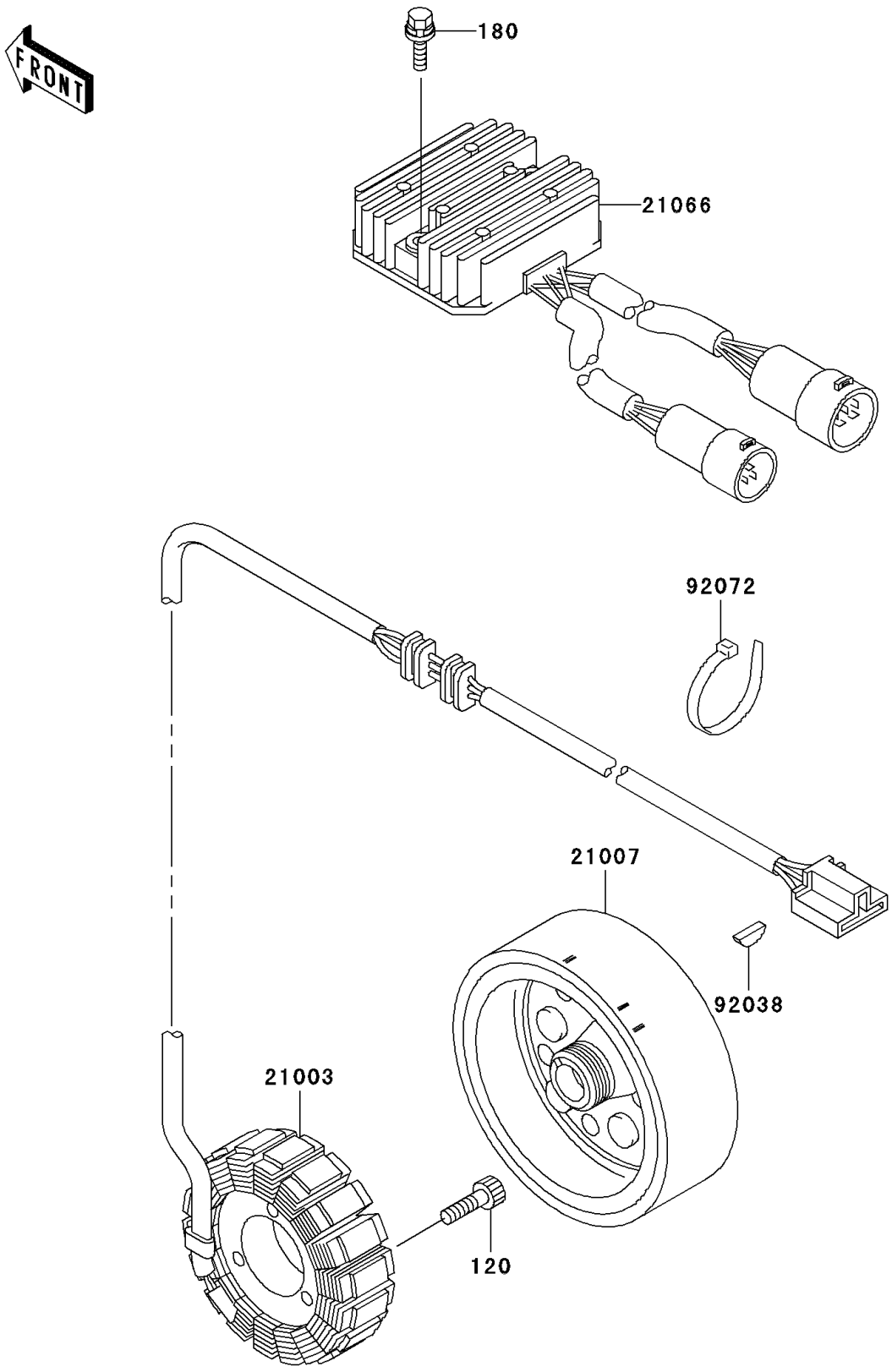


© 2026 Kawasaki Motors Corp., U.S.A.

# 2002 Prairie 300

## PARTS LIST

### Generator

| ITEM NAME | PART NUMBER | QUANTITY |
|---|---|---|
| BOLT-SOCKET,6X30 (Ref # 120) | 120P0630 | 3 |
| BOLT-UPSET-WS,6X30 (Ref # 180) | 180B0630 | 2 |
| STATOR (Ref # 21003) | 21003-1343 | 1 |
| ROTOR (Ref # 21007) | 21007-1361 | 1 |
| REGULATOR-VOLTAGE (Ref # 21066) | 21066-1112 | 1 |
| KEY,WOODRUFF (Ref # 92038) | 92038-001 | 1 |
| BAND,L=123 (Ref # 92072) | 92072-030 | 1 |

© 2026 Kawasaki Motors Corp., U.S.A.