2002 Prairie 300

PARTS DIAGRAM

Drive Converter

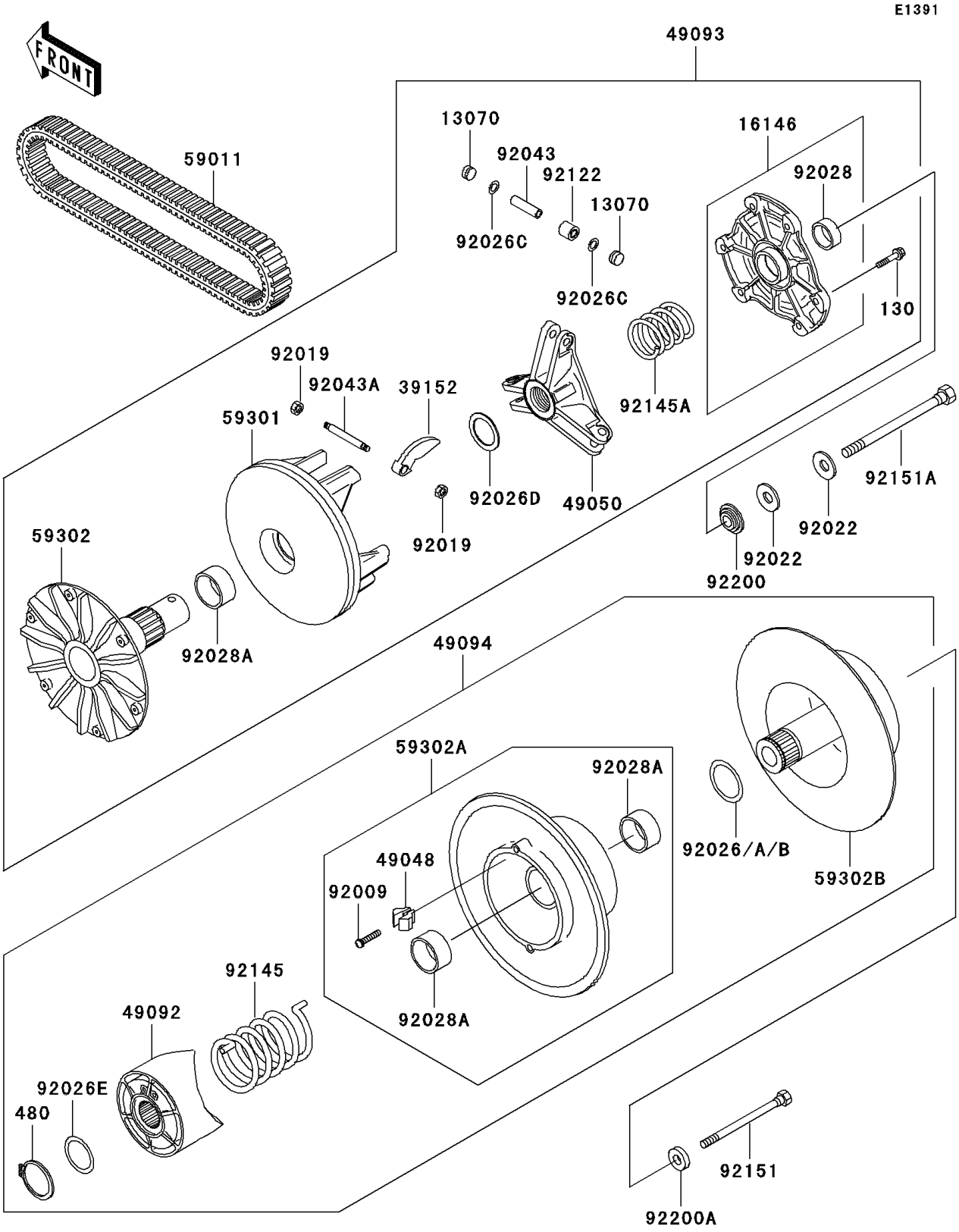

© 2026 Kawasaki Motors Corp., U.S.A.

2002 Prairie 300

PARTS LIST

Drive Converter

ITEM NAME	PART NUMBER	QUANTITY
BOLT-FLANGED,6X30 (Ref # 130)	130P0630	6
CIRCLIP (Ref # 480)	480J3400	1
GUIDE (Ref # 13070)	13070-1330	6
COVER-ASSY (Ref # 16146)	16146-1194	1
WEIGHT-RAMP (Ref # 39152)	39152-1061	3
SHOE (Ref # 49048)	49048-1060	3
SPIDER (Ref # 49050)	49050-1064	1
RAMP (Ref # 49092)	49092-1063	1
CONVERTER-ASSY-DRIVE (Ref # 49093)	49093-1059	1
CONVERTER-ASSY-DRIVEN (Ref # 49094)	49094-1058	1
BELT (Ref # 59011)	59011-1065	1
SHEAVE-MOVABLE (Ref # 59301)	59301-1060	1
SHEAVE-COMP,FIXED (Ref # 59302)	59302-1070	1
SHEAVE-COMP,MOVABLE (Ref # 59302A)	59302-1072	1
SHEAVE-COMP,FIXED (Ref # 59302B)	59302-1073	1
SCREW,SHOE (Ref # 92009)	92009-1849	3
NUT,LOCK,6MM (Ref # 92019)	92019-008	6
WASHER,SPECIAL CONICAL (Ref # 92022)	92022-1901	2
SPACER,39X50X0.50 (Ref # 92026)	92026-1507	AR
SPACER,39X50X0.60 (Ref # 92026A)	92026-1508	AR
SPACER,39X50X0.80 (Ref # 92026B)	92026-1510	AR
SPACER (Ref # 92026C)	92026-1512	6
SPACER,32.3X44.3X1.60 (Ref # 92026D)	92026-1520	1
SPACER,34X44X0.80 (Ref # 92026E)	92026-1521	1
BUSHING (Ref # 92028)	92028-1861	1
BUSHING (Ref # 92028A)	92028-1864	3
PIN (Ref # 92043)	92043-1572	3
PIN (Ref # 92043A)	92043-1573	3
ROLLER (Ref # 92122)	92122-1202	3

© 2026 Kawasaki Motors Corp., U.S.A.

2002 Prairie 300

PARTS LIST

Drive Converter

ITEM NAME	PART NUMBER	QUANTITY
SPRING,CONVERTER DRIVEN (Ref # 92145)	92145-1129	1
SPRING,CONVERTER DRIVE (Ref # 92145A)	92145-1187	1
BOLT,10X95 (Ref # 92151)	92151-1315	1
BOLT,12X165 (Ref # 92151A)	92151-1393	1
WASHER (Ref # 92200)	92200-1401	1
WASHER,10.2X37X5.0 (Ref # 92200A)	92200-1402	1

© 2026 Kawasaki Motors Corp., U.S.A.