2002 Prairie 300

PARTS DIAGRAM

Crankshaft

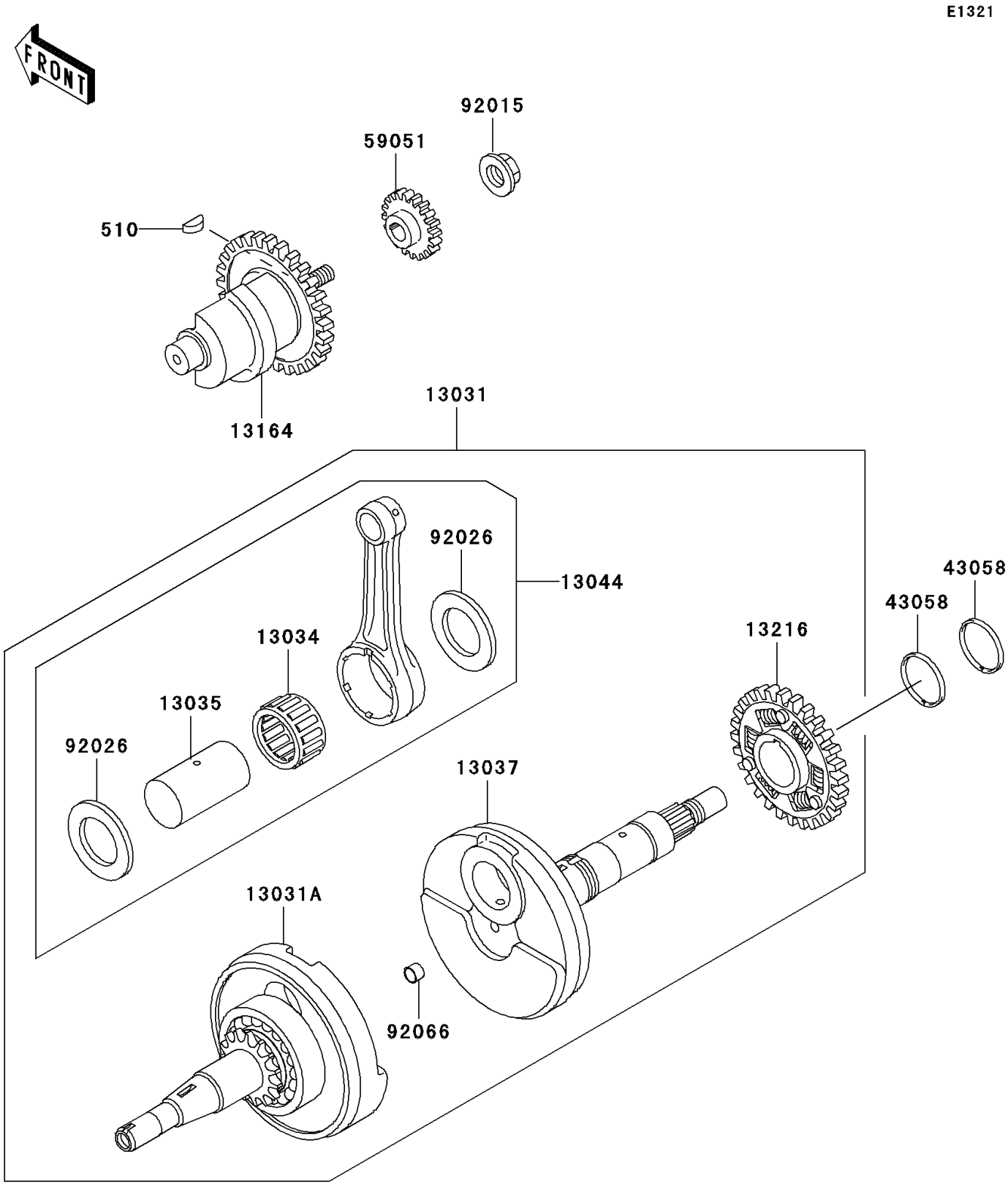

© 2026 Kawasaki Motors Corp., U.S.A.

2002 Prairie 300

PARTS LIST

Crankshaft

ITEM NAME	PART NUMBER	QUANTITY
KEY-WOODRUFF (Ref # 510)	510A3100	1
CRANKSHAFT-COMP (Ref # 13031)	13031-1440	1
CRANKSHAFT-COMP,LH (Ref # 13031A)	13031-1445	1
BEARING-BIG END,PK32X43X22.4 (Ref # 13034)	13034-1061	1
PIN-CRANK (Ref # 13035)	13035-1067	1
CRANKSHAFT,RH (Ref # 13037)	13037-1582	1
SET-CONNECTING ROD (Ref # 13044)	13044-5066	1
BALANCER-COMP (Ref # 13164)	13164-1010	1
GEAR-COMP,BALANCER (Ref # 13216)	13216-1171	1
RING (Ref # 43058)	43058-1091	2
GEAR-SPUR,OIL PUMP (Ref # 59051)	59051-1378	1
NUT,FLANGED,10MM (Ref # 92015)	92015-1428	1
SPACER,32X51.5X1.2 (Ref # 92026)	92026-1232	2
PLUG,CRANKSHAFT (Ref # 92066)	92066-1159	1

© 2026 Kawasaki Motors Corp., U.S.A.