2002 Prairie 300 4X4

PARTS DIAGRAM

Control

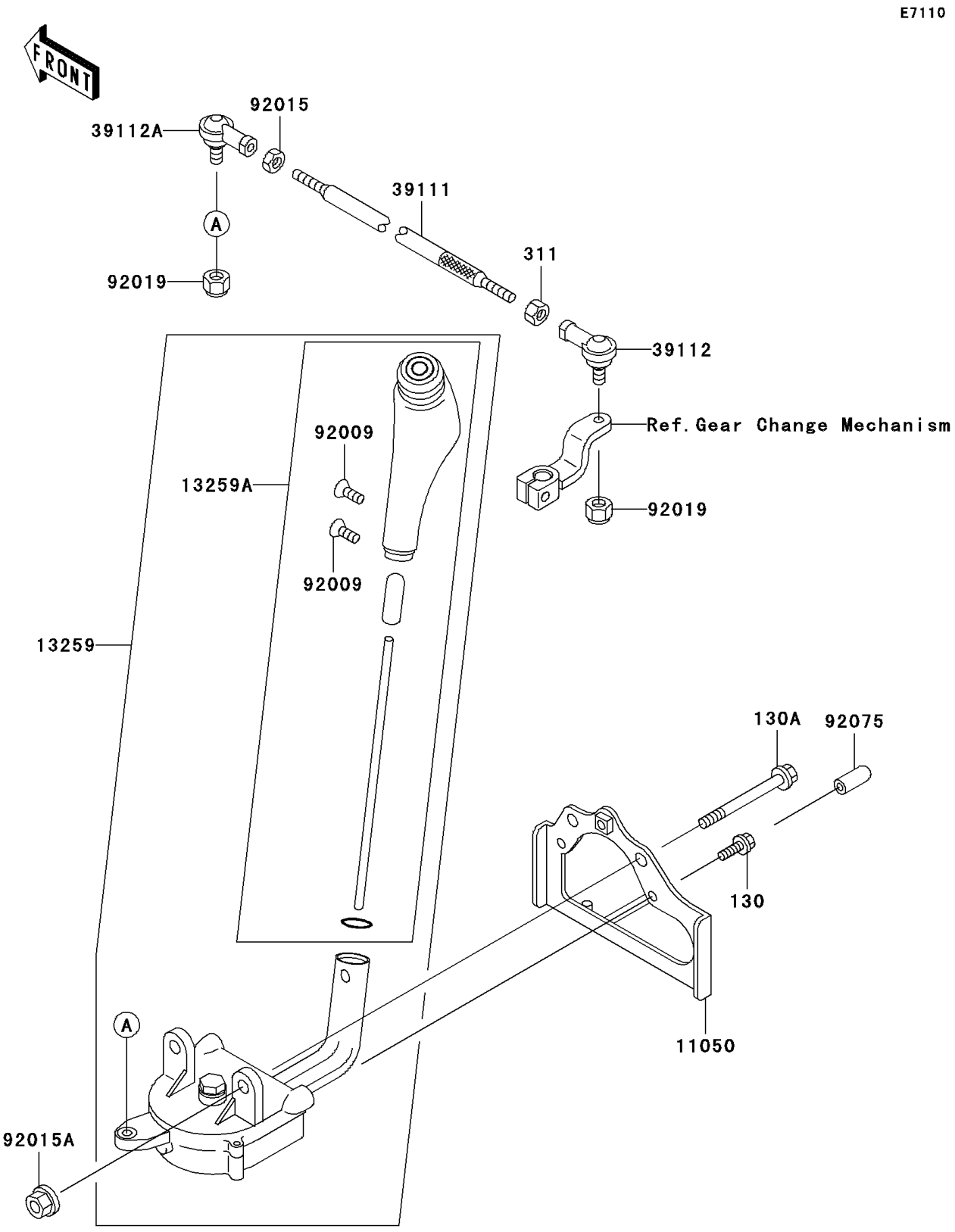

© 2026 Kawasaki Motors Corp., U.S.A.

2002 Prairie 300 4X4

PARTS LIST

Control

ITEM NAME	PART NUMBER	QUANTITY
BOLT-FLANGED,6X16 (Ref # 130)	130J0616	2
BOLT-FLANGED,8X60 (Ref # 130A)	130J0860	2
NUT-HEX (Ref # 311)	311J0600	1
BRACKET (Ref # 11050)	11050-1700	1
LEVER-ASSY-SHIFT CONTROL (Ref # 13259)	13259-1010	1
LEVER-ASSY-SHIFT CONTROL,KNOB (Ref # 13259A)	13259-1011	1
ROD-TIE (Ref # 39111)	39111-1161	1
RODEND-TIE (Ref # 39112)	39112-1006	1
RODEND-TIE (Ref # 39112A)	39112-1070	1
SCREW,SHIFT CONTROL (Ref # 92009)	92009-1885	2
NUT (Ref # 92015)	92015-1125	1
NUT,LOCK,FLANGED,8MM (Ref # 92015A)	92015-1397	2
NUT,LOCK,6MM (Ref # 92019)	92019-008	2
DAMPER (Ref # 92075)	92075-1980	1

© 2026 Kawasaki Motors Corp., U.S.A.