1999 Prairie 300 4X4

PARTS DIAGRAM

Recoil Starter

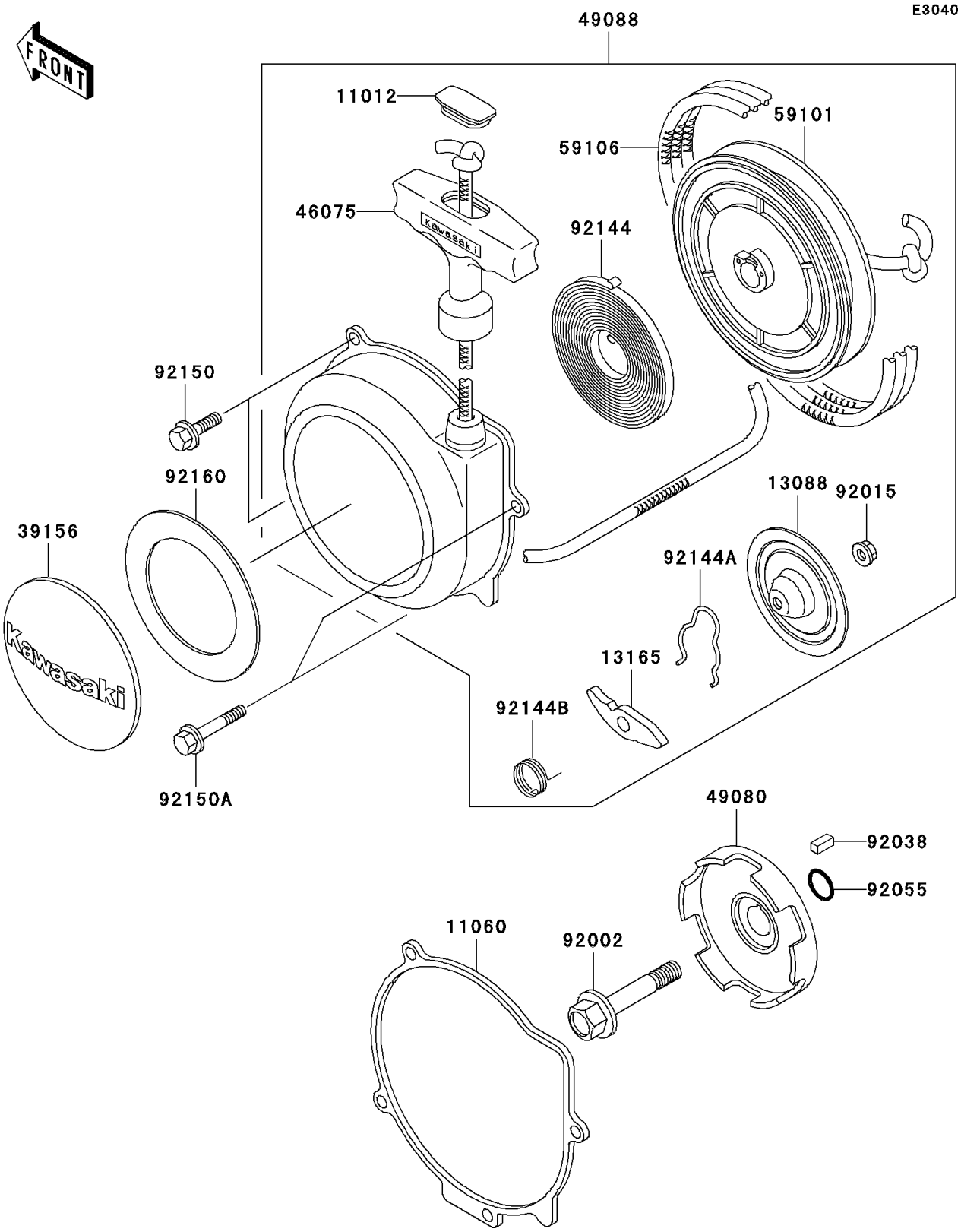

© 2026 Kawasaki Motors Corp., U.S.A.

1999 Prairie 300 4X4

PARTS LIST

Recoil Starter

ITEM NAME	PART NUMBER	QUANTITY

© 2026 Kawasaki Motors Corp., U.S.A.