1999 Prairie 300 4X4

PARTS DIAGRAM

Generator

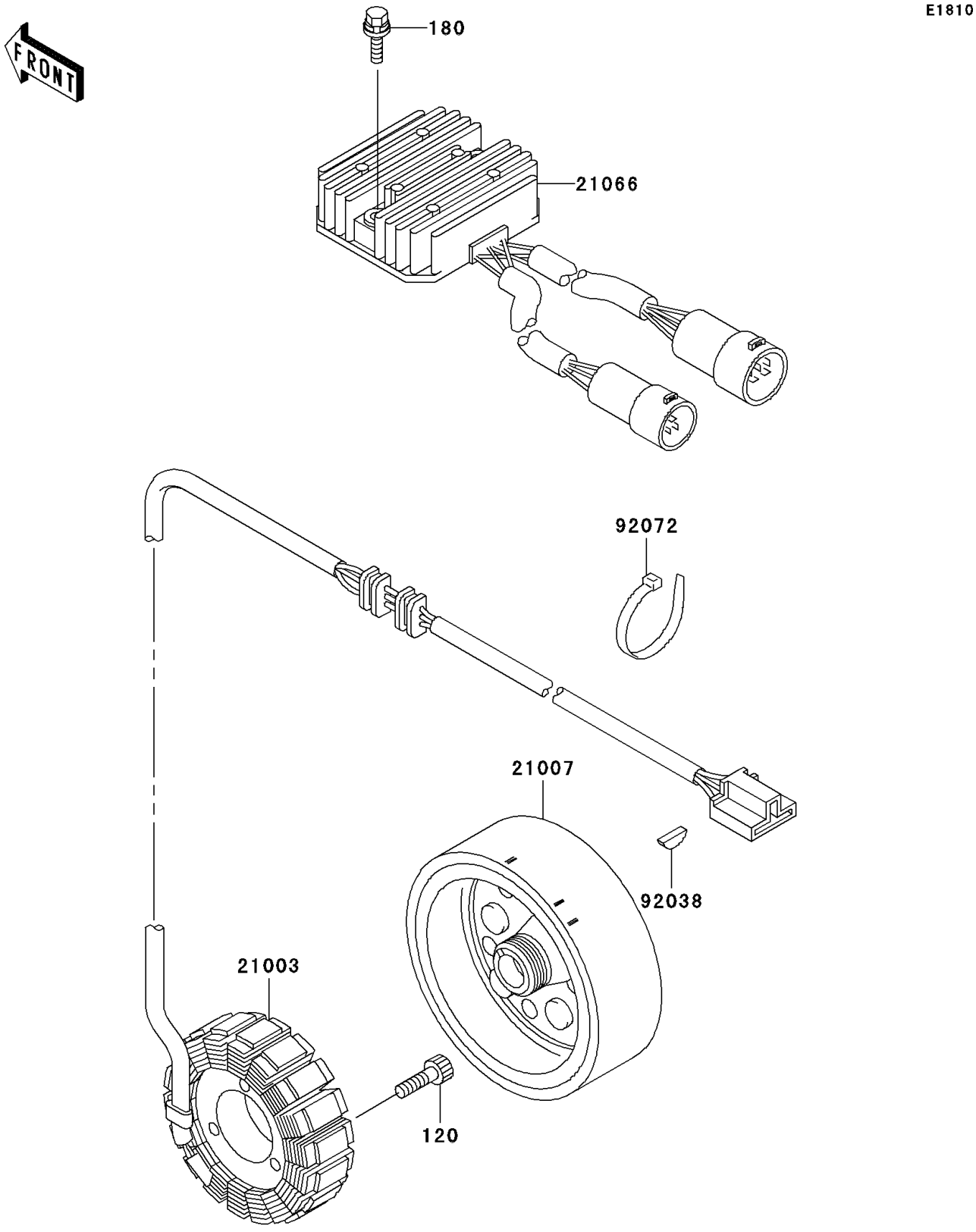

© 2026 Kawasaki Motors Corp., U.S.A.

1999 Prairie 300 4X4

PARTS LIST

Generator

ITEM NAME	PART NUMBER	QUANTITY
BOLT-SOCKET,6X30 (Ref # 120)	120P0630	3
BOLT-UPSET-WS,6X30 (Ref # 180)	180B0630	2
STATOR (Ref # 21003)	21003-1343	1
ROTOR (Ref # 21007)	21007-1361	1
REGULATOR-VOLTAGE (Ref # 21066)	21066-1112	1
KEY,WOODRUFF (Ref # 92038)	92038-001	1
BAND,L=123 (Ref # 92072)	92072-030	1

© 2026 Kawasaki Motors Corp., U.S.A.