1999 Prairie 300 4X4

PARTS DIAGRAM

Cylinder Head

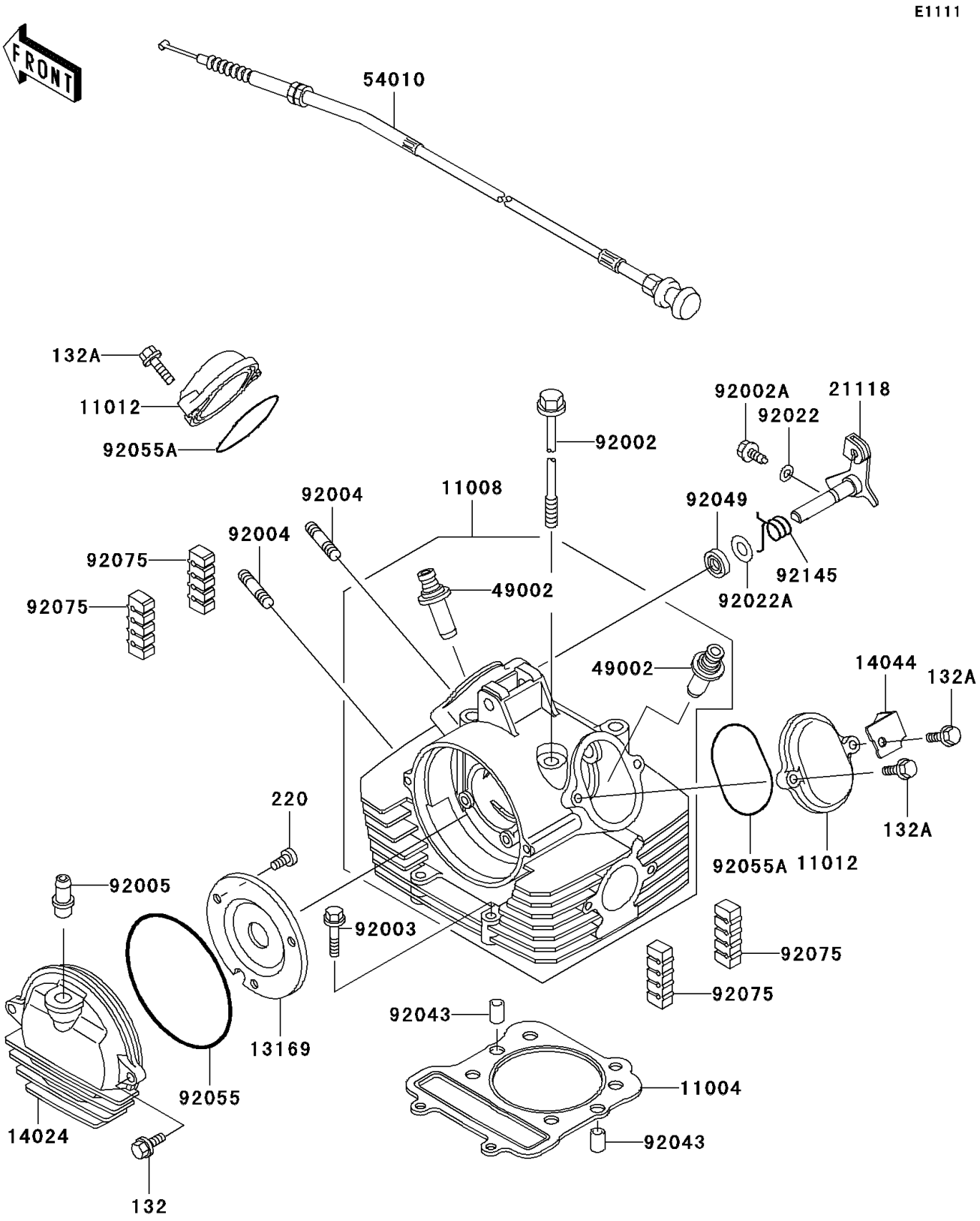

© 2026 Kawasaki Motors Corp., U.S.A.

1999 Prairie 300 4X4

PARTS LIST

Cylinder Head

ITEM NAME	PART NUMBER	QUANTITY
BOLT-FLANGED-SMALL,6X16 (Ref # 132)	132Y0616	2
BOLT-FLANGED-SMALL,6X25 (Ref # 132A)	132Y0625	4
SCREW-PAN-CROS,6X10 (Ref # 220)	220B0610	3
GASKET-HEAD (Ref # 11004)	11004-1340	1
HEAD-COMP-CYLINDER (Ref # 11008)	11008-1292	1
CAP,ROCKER ARM (Ref # 11012)	11012-1486	2
PLATE,CAMSHAFT COVER (Ref # 13169)	13169-1961	1
COVER,CAMSHAFT (Ref # 14024)	14024-1060	1
HOLDER-CABLE (Ref # 14044)	14044-1095	1
DECOMPRESSOR (Ref # 21118)	21118-1081	1
GUIDE-VALVE (Ref # 49002)	49002-1092	AR
CABLE,DECOMPRESSOR (Ref # 54010)	54010-1113	1
BOLT,8X233 (Ref # 92002)	92002-1515	4
BOLT,FLANGED-SMALL,6X8.1X2.5 (Ref # 92002A)	92002-1962	1
BOLT,FLANGED,6X32 (Ref # 92003)	92003-229	2
STUD,8X30 (Ref # 92004)	92004-1121	2
FITTING,BREATHER PIPE (Ref # 92005)	92005-1124	1
WASHER,6.1X12X1 (Ref # 92022)	92022-077	1
WASHER,10.2X20X0.5 (Ref # 92022A)	92022-1649	1
PIN,8.2X10X14 (Ref # 92043)	92043-1264	2
SEAL-OIL (Ref # 92049)	92049-1542	1
RING-O,99X3.1 (Ref # 92055)	92055-107	1
RING-O,53.5X2.6 (Ref # 92055A)	92055-112	2
DAMPER (Ref # 92075)	92075-1657	4
SPRING (Ref # 92145)	92145-1132	1

© 2026 Kawasaki Motors Corp., U.S.A.