2019 KLX450R

PARTS DIAGRAM

Muffler(s)

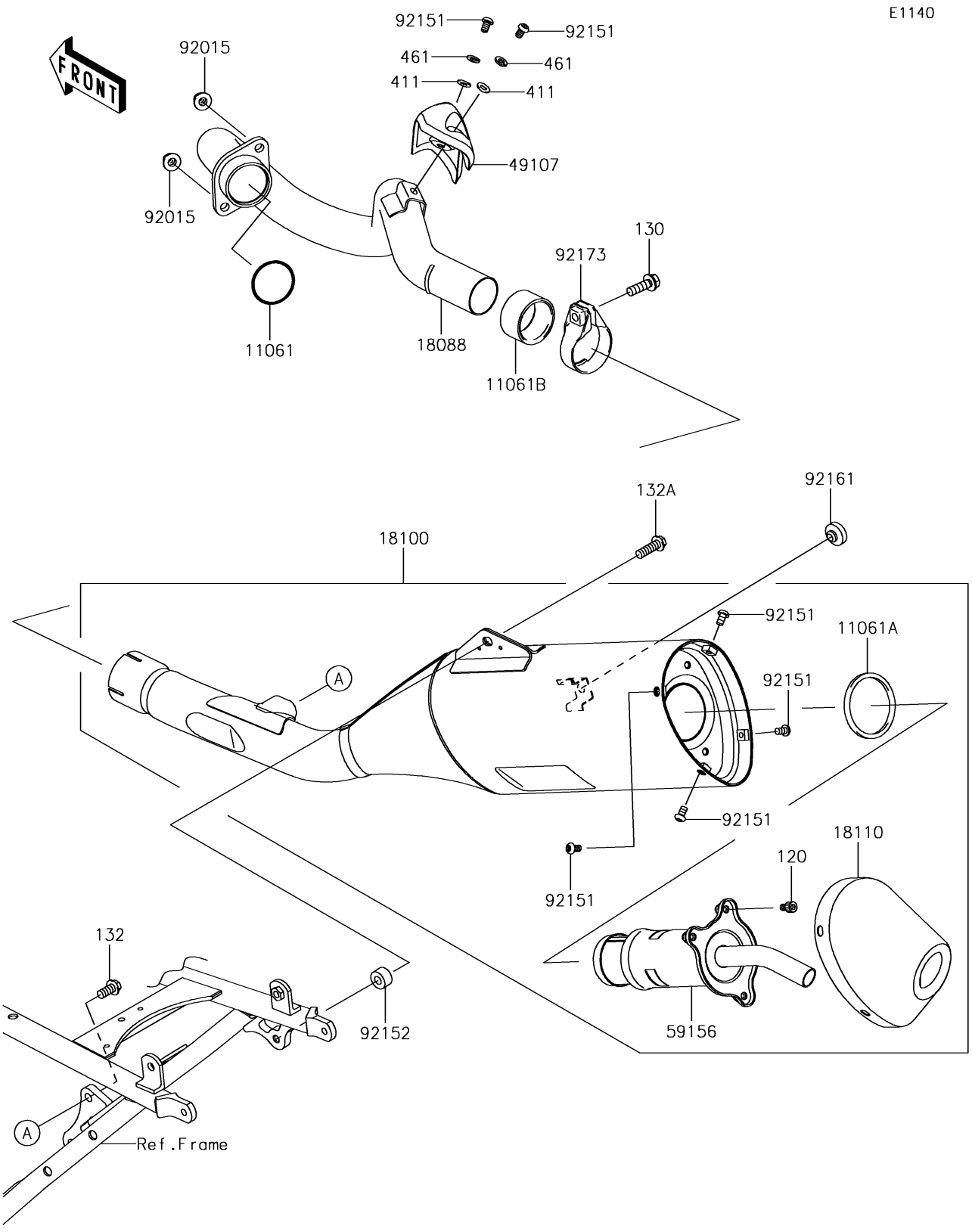

© 2026 Kawasaki Motors Corp., U.S.A.

2019 KLX450R

PARTS LIST

Muffler(s)

ITEM NAME	PART NUMBER	QUANTITY
GASKET,38.9X46.4X3.0 (Ref # 11061)	11061-0082	1
GASKET (Ref # 11061A)	11061-0100	1
GASKET,38.1X48.7X32 (Ref # 11061B)	11061-0285	1
BOLT-SOCKET,6X10 (Ref # 120)	120CA0610	3
BOLT-FLANGED,8X25 (Ref # 130)	130CA0825	1
BOLT-FLANGED-SMALL,8X18 (Ref # 132)	132BB0818	1
BOLT-FLANGED-SMALL,8X25 (Ref # 132A)	132BB0825	1
PIPE-EXHAUST (Ref # 18088)	18088-0371	1
BODY-ASSY-MUFFLER (Ref # 18100)	18100-0073	1
BODY END-MUFFLER (Ref # 18110)	18110-0078	1
WASHER-PLAIN,6MM (Ref # 411)	411S0600	2
WASHER-SPRING,6MM (Ref # 461)	461S0600	2
COVER-EXHAUST PIPE (Ref # 49107)	49107-0109	1
PIPE-TAIL (Ref # 59156)	59156-0028	1
NUT,8MM (Ref # 92015)	92015-1402	2
BOLT,SOCKET,6X10 (Ref # 92151)	92151-1449	6
COLLAR (Ref # 92152)	92152-3726	1
DAMPER,8X22X6 (Ref # 92161)	92161-0516	1
CLAMP (Ref # 92173)	92173-0995	1

© 2026 Kawasaki Motors Corp., U.S.A.