2004 KFX700 V Force

PARTS DIAGRAM

Brake Pedal

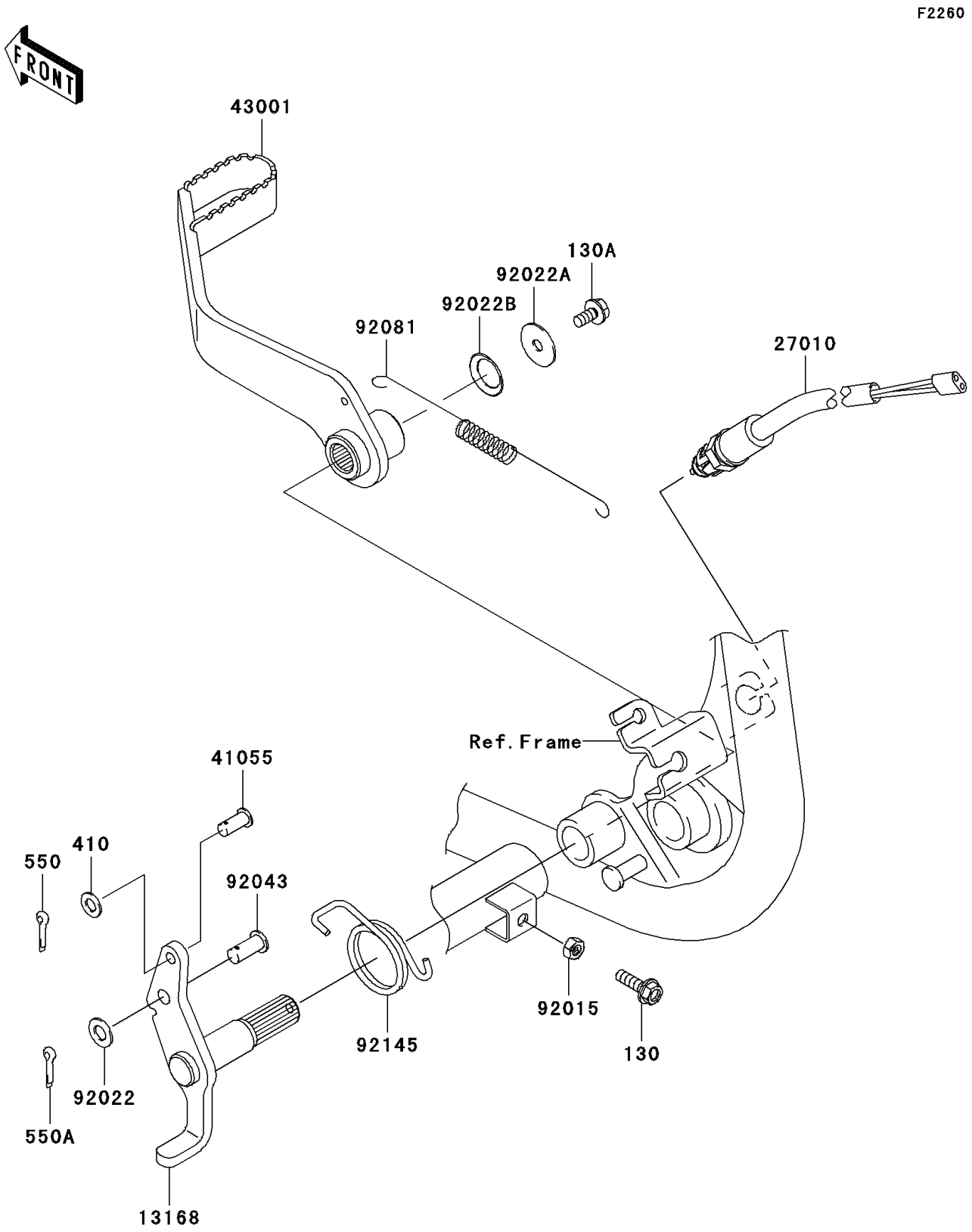

© 2026 Kawasaki Motors Corp., U.S.A.

2004 KFX700 V Force

PARTS LIST

Brake Pedal

ITEM NAME	PART NUMBER	QUANTITY
BOLT-FLANGED,6X20 (Ref # 130)	130G0620	1
BOLT-FLANGED (Ref # 130A)	130J0612	1
WASHER-PLAIN-SMALL,6MM (Ref # 410)	410B0600	1
PIN-COTTER,1.2X10 (Ref # 550)	550D1210	1
PIN-COTTER,2.0X15 (Ref # 550A)	550D2015	1
LEVER (Ref # 13168)	13168-0014	1
SWITCH,BRAKE (Ref # 27010)	27010-1494	1
PIN (Ref # 41055)	41055-003	1
LEVER-BRAKE,PEDAL,G.GRAY (Ref # 43001)	43001-0011-HN	1
NUT,6MM (Ref # 92015)	92015-1410	1
WASHER,8.5X16X1.2 (Ref # 92022)	92022-1582	1
WASHER,6.5X24X2 (Ref # 92022A)	92022-1690	1
WASHER,SPRING,T=0.3 (Ref # 92022B)	92022-1943	1
PIN,8X16 (Ref # 92043)	92043-1013	1
SPRING,BRAKE SWITCH (Ref # 92081)	92081-1565	1
SPRING,BRAKE PEDAL RETURN (Ref # 92145)	92145-1534	1

© 2026 Kawasaki Motors Corp., U.S.A.