2004 KFX700 V Force

PARTS DIAGRAM

Starter Motor

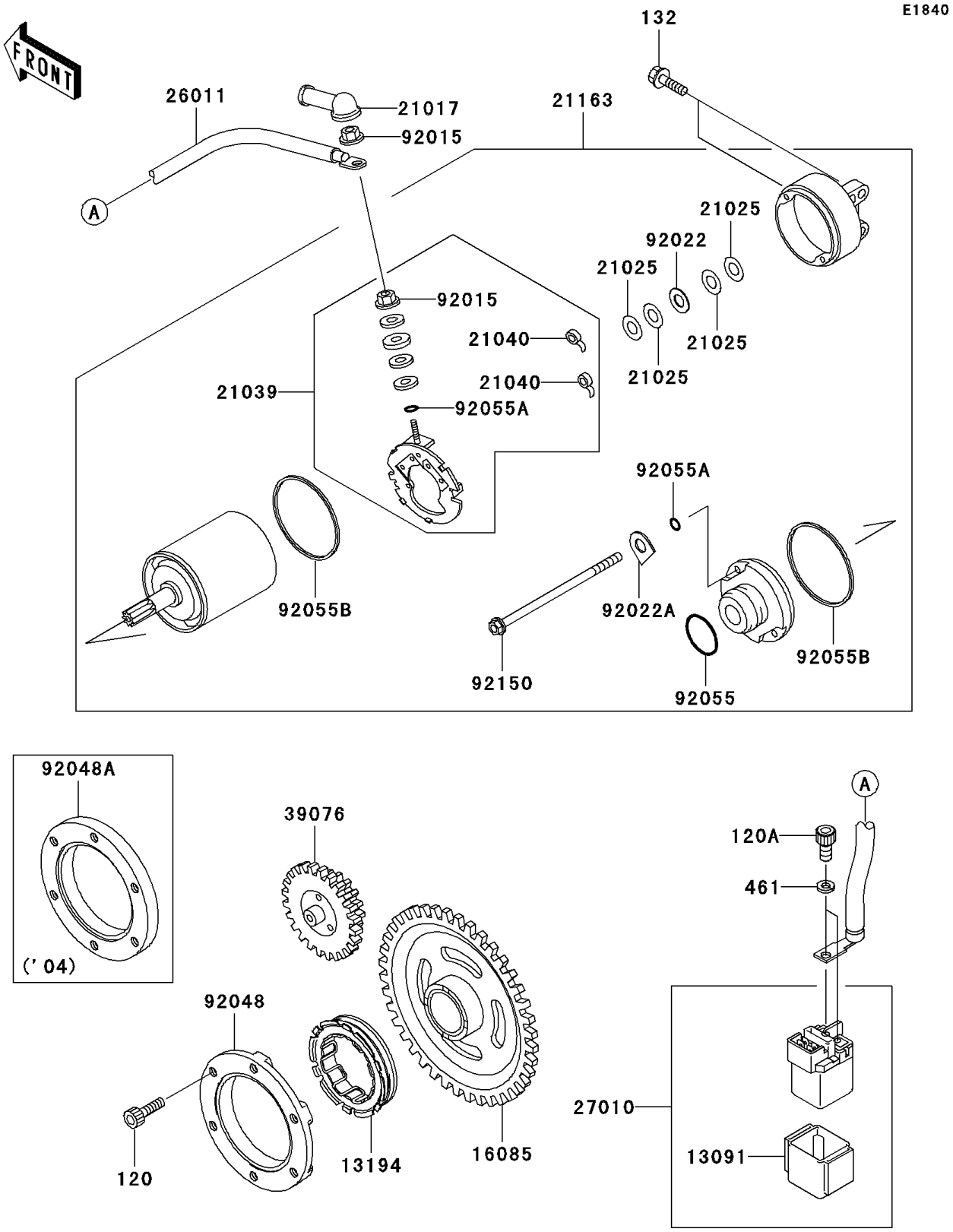

© 2026 Kawasaki Motors Corp., U.S.A.

2004 KFX700 V Force

PARTS LIST

Starter Motor

ITEM NAME	PART NUMBER	QUANTITY
BOLT-SOCKET (Ref # 120)	120P0816	6
BOLT-SOCKET (Ref # 120A)	120S0510	2
BOLT-FLANGED-SMALL (Ref # 132)	132Y0630	2
WASHER-SPRING,5MM,BLACK (Ref # 461)	461K0500	2
HOLDER (Ref # 13091)	13091-1992	1
CLUTCH-ONEWAY (Ref # 13194)	13194-1094	1
GEAR,STARTER (Ref # 16085)	16085-1238	1
GROMMET,STARTER TERMINAL (Ref # 21017)	21017-017	1
WASHER,9.1X18X0.2 (Ref # 21025)	21025-011	4
BRUSH,CARBON (Ref # 21039)	21039-1063	1
SPRING-BRUSH (Ref # 21040)	21040-1057	2
STARTER-ELECTRIC (Ref # 21163)	21163-1320	1
WIRE-LEAD (Ref # 26011)	26011-1845	1
SWITCH,MAGNETIC (Ref # 27010)	27010-1376	1
LIMITER,STARTER (Ref # 39076)	39076-1076	1
NUT,STARTER MOTOR (Ref # 92015)	92015-1476	2
WASHER,9.1X18X0.8 (Ref # 92022)	92022-1132	1
WASHER,LOCK,T=2.0 (Ref # 92022A)	92022-1458	2
RACE,ONEWAY CLUTCH (Ref # 92048A)	92048-1090	1
RING-O (Ref # 92055)	92055-1276	1
RING-O,4.5X2.0 (Ref # 92055A)	92055-1370	3
RING-O,STARTER MOTOR (Ref # 92055B)	92055-1381	2
BOLT (Ref # 92150)	92150-1243	2

© 2026 Kawasaki Motors Corp., U.S.A.