2004 KFX700 V Force

PARTS DIAGRAM

Cylinder/Piston(s)

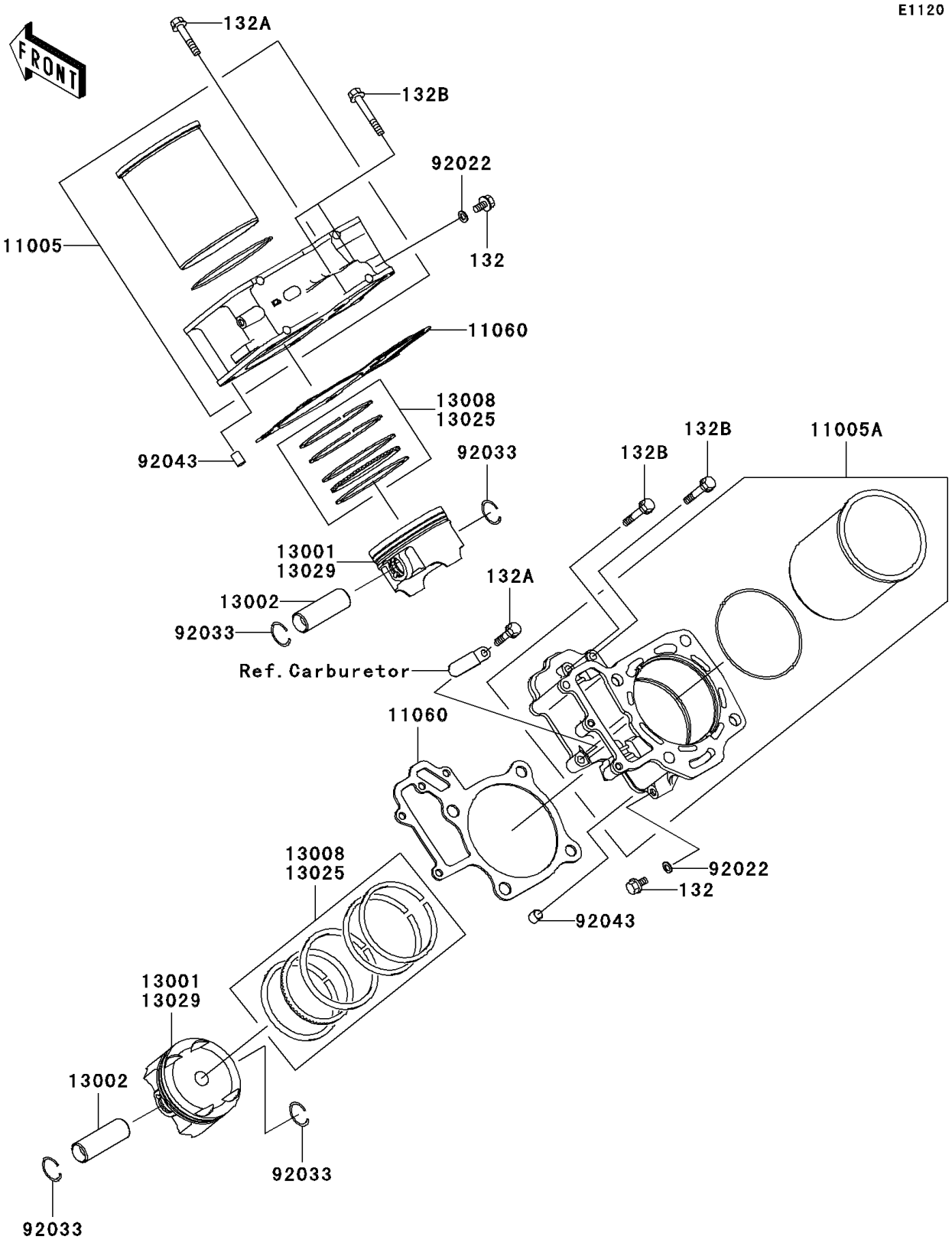

© 2026 Kawasaki Motors Corp., U.S.A.

2004 KFX700 V Force

PARTS LIST

Cylinder/Piston(s)

ITEM NAME	PART NUMBER	QUANTITY
BOLT-FLANGED-SMALL (Ref # 132)	132Y0612	2
BOLT-FLANGED-SMALL (Ref # 132A)	132Y0630	2
BOLT-FLANGED-SMALL (Ref # 132B)	132Y0640	4
CYLINDER-ENGINE,FR (Ref # 11005)	11005-1990	1
CYLINDER-ENGINE,RR (Ref # 11005A)	11005-1992	1
GASKET,CYLINDER BASE (Ref # 11060)	11060-1965	2
PISTON-ENGINE,STD (Ref # 13001)	13001-1658	2
PIN-PISTON (Ref # 13002)	13002-1060	2
RING-SET-PISTON,STD (Ref # 13008)	13008-1215	2
RING-SET-PISTON L,O/S 0.50 (Ref # 13025)	13025-0005	AR
PISTON-ENGINE L,O/S 0.50 (Ref # 13029)	13029-0007	AR
WASHER,6.2X11X1 (Ref # 92022)	92022-304	2
RING-SNAP (Ref # 92033)	92033-1207	4
PIN,10.1X12X14 (Ref # 92043)	92043-4009	4

© 2026 Kawasaki Motors Corp., U.S.A.