# 2004 KFX80

## PARTS DIAGRAM

### Recoil Starter

E3040

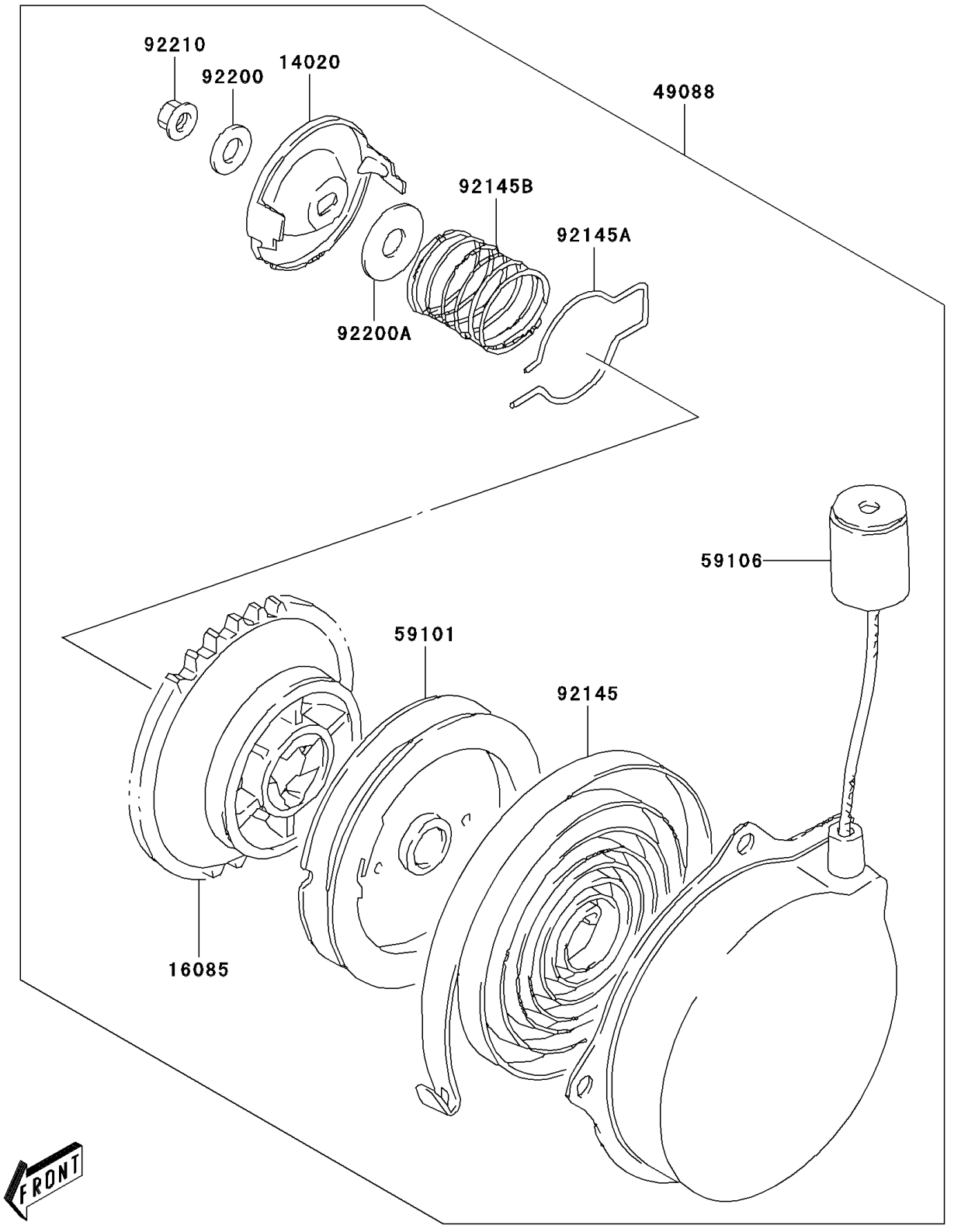


© 2026 Kawasaki Motors Corp., U.S.A.

# 2004 KFX80

## PARTS LIST

### Recoil Starter

| ITEM NAME | PART NUMBER | QUANTITY |
|---|---|---|
| RETAINER (Ref # 14020) | 14020-S004 | 1 |
| GEAR (Ref # 16085) | 16085-S003 | 1 |
| STARTER-RECOIL (Ref # 49088) | 49088-S003 | 1 |
| REEL (Ref # 59101) | 59101-S004 | 1 |
| ROPE (Ref # 59106) | 59106-S002 | 1 |
| SPRING,SPIRAL (Ref # 92145) | 92145-S074 | 1 |
| SPRING,FRICTION (Ref # 92145A) | 92145-S075 | 1 |
| SPRING,RETURN (Ref # 92145B) | 92145-S076 | 1 |
| WASHER,8.5X18X1.6 (Ref # 92200) | 92200-S108 | 1 |
| WASHER,10.2X27X1.6 (Ref # 92200A) | 92200-S109 | 1 |
| NUT (Ref # 92210) | 92210-S080 | 1 |

© 2026 Kawasaki Motors Corp., U.S.A.