2006 ZZR600

PARTS DIAGRAM

Cables

F2540

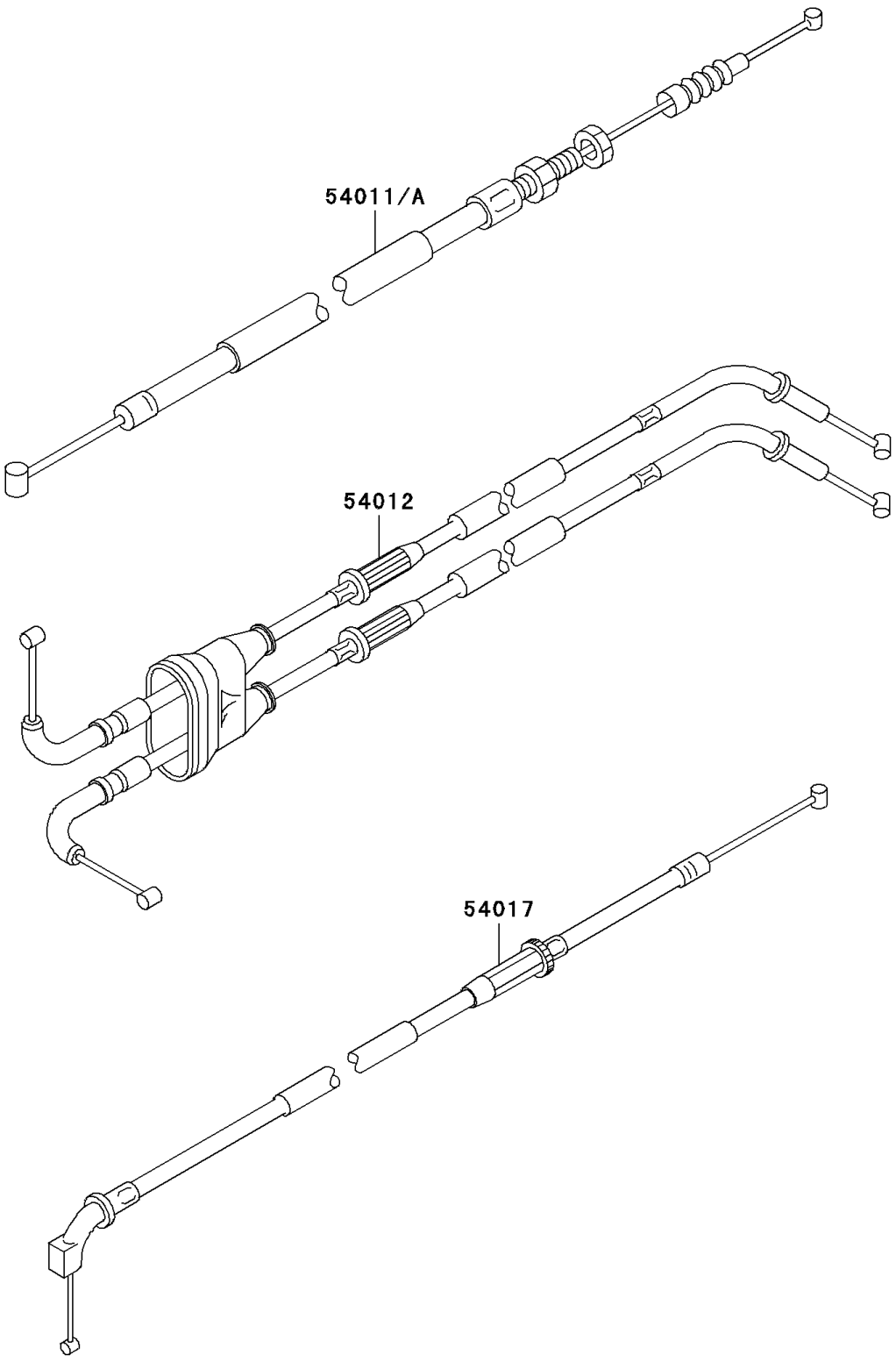

© 2026 Kawasaki Motors Corp., U.S.A.

2006 ZZR600

PARTS LIST

Cables

ITEM NAME	PART NUMBER	QUANTITY
CABLE-CLUTCH (Ref # 54011A)	54011-1382	1
CABLE-THROTTLE (Ref # 54012)	54012-1630	1
CABLE-STARTER (Ref # 54017)	54017-1195	1

© 2026 Kawasaki Motors Corp., U.S.A.