2007 ZZR600

PARTS DIAGRAM

Swingarm

F2141

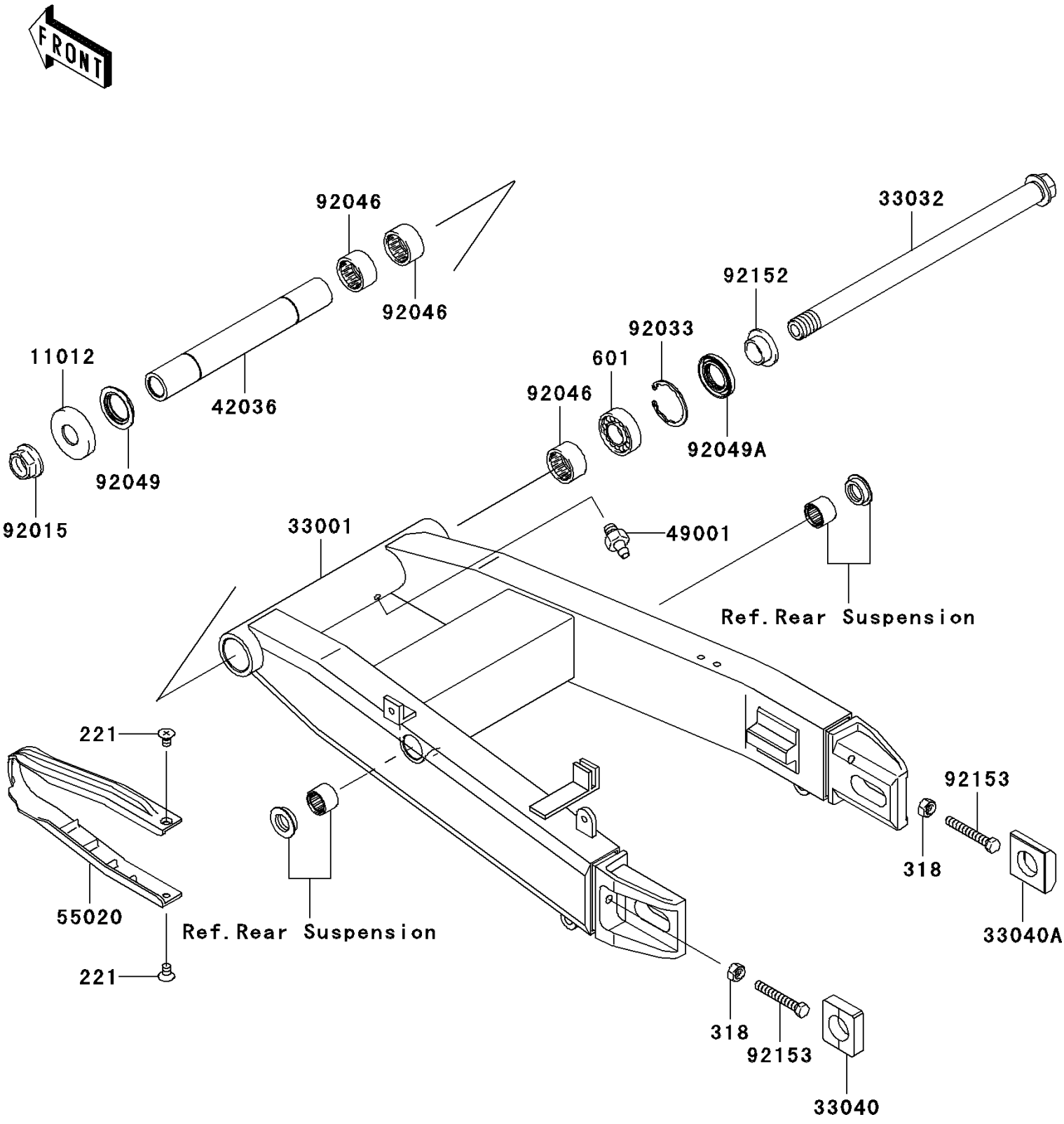

© 2026 Kawasaki Motors Corp., U.S.A.

2007 ZZR600

PARTS LIST

Swingarm

ITEM NAME	PART NUMBER	QUANTITY
SCREW-CSK-CROS,5X8 (Ref # 221)	221C0508	2
NUT-HEX-SMALL,8MM (Ref # 318)	318G0800	2
BEARING-BALL,#6004 (Ref # 601)	601A6004	1
CAP (Ref # 11012)	11012-1658	1
ARM-COMP-SWING,P.SILVER (Ref # 33001)	33001-0055-458	1
SHAFT-SWING ARM (Ref # 33032)	33032-1191	1
ADJUSTER-CHAIN (Ref # 33040)	33040-1114	1
ADJUSTER-CHAIN,RH (Ref # 33040A)	33040-1180	1
SLEEVE,SWING ARM,L=213 (Ref # 42036)	42036-1283	1
NIPPLE-GREASE (Ref # 49001)	49001-0001	1
GUARD,CHAIN (Ref # 55020)	55020-1702	1
NUT,FLANGED,20MM (Ref # 92015)	92015-1724	1
RING-SNAP,42MM (Ref # 92033)	92033-1041	1
BEARING-NEEDLE,BM2817 (Ref # 92046)	92046-1111	3
SEAL-OIL (Ref # 92049)	92049-1181	1
SEAL-OIL,MHSA25 42 6 (Ref # 92049A)	92049-1314	1
COLLAR,SWING ARM,L=12.5 (Ref # 92152)	92152-1234	1
BOLT,8X55 (Ref # 92153)	92153-1407	2

© 2026 Kawasaki Motors Corp., U.S.A.