2018 KLR™650 CAMO

PARTS DIAGRAM

Frame

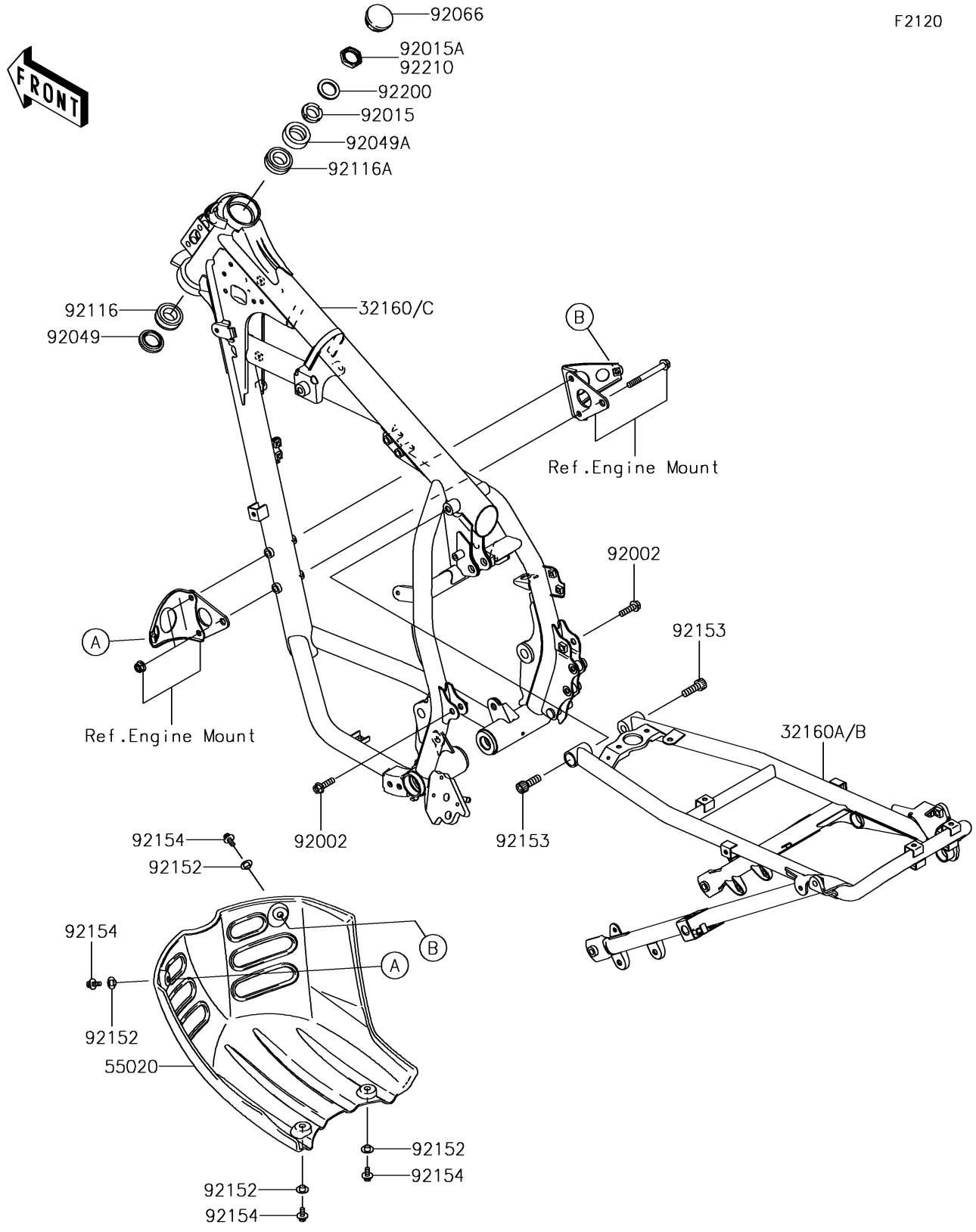

© 2026 Kawasaki Motors Corp., U.S.A.

2018 KLR™650 CAMO

PARTS LIST

Frame

ITEM NAME	PART NUMBER	QUANTITY
FRAME-COMP,RR,F.S.BLACK (Ref # 32160B)	32160-0497-18R	1
FRAME-COMP,MAIN,F.S.BLACK (Ref # 32160C)	32160-0499-18R	1
GUARD,ENGINE,F.BLACK (Ref # 55020)	55020-0235-6Z	1
BOLT,FLANGED,8X28 (Ref # 92002)	92002-1971	2
NUT,25MM,T=12 (Ref # 92015)	92015-1546	1
SEAL-OIL,XMHE36X52X4J (Ref # 92049)	92049-1162	1
SEAL-OIL,STEERING STEM (Ref # 92049A)	92049-1214	1
PLUG (Ref # 92066)	92066-1306	1
BEARING-ROLLER,HR320/28XJ (Ref # 92116)	92116-1009	1
BEARING-ROLLER,HICAP 32005JR (Ref # 92116A)	92116-1052	1
COLLAR (Ref # 92152)	92152-0427	4
BOLT,SOCKET,10X30 (Ref # 92153)	92153-1524	2
BOLT,6X16 (Ref # 92154)	92154-0391	4
WASHER,STEERING STEM (Ref # 92200)	92200-0517	1
NUT,STEERING STEM,22MM (Ref # 92210)	92210-1521	1

© 2026 Kawasaki Motors Corp., U.S.A.