1991 Mojave 250

PARTS DIAGRAM

Muffler

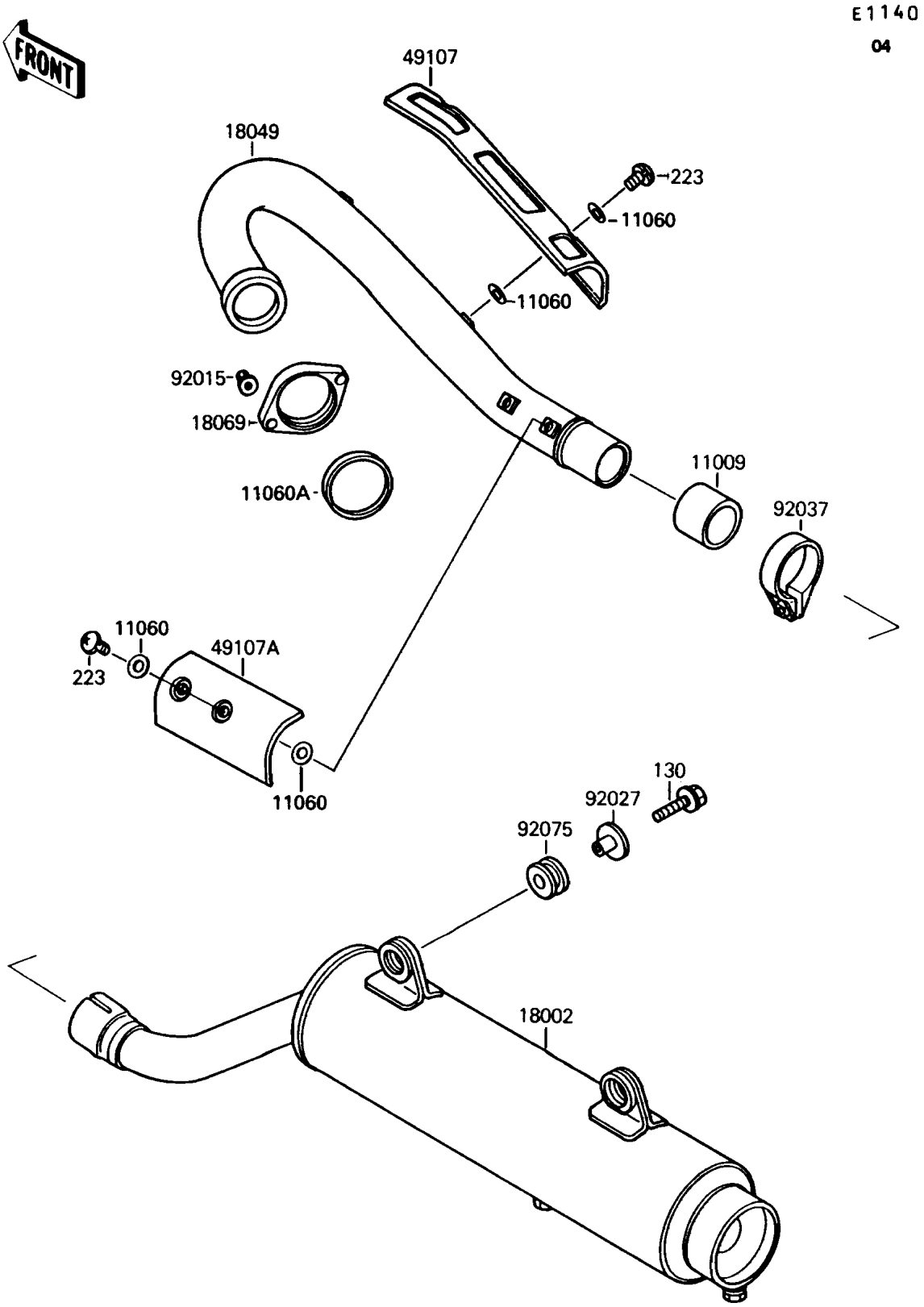

© 2026 Kawasaki Motors Corp., U.S.A.

1991 Mojave 250

PARTS LIST

Muffler

ITEM NAME	PART NUMBER	QUANTITY
GASKET,EXHAUST PIPE CONNECTING (Ref # 11009)	11009-1667	1
GASKET,6.2X11.5X1.5 (Ref # 11060)	11060-1109	8
GASKET,EXHAUST PIPE (Ref # 11060A)	11060-1126	1
BODY-COMP-MUFFLER (Ref # 18002)	18002-1678	1
PIPE-EXHAUST (Ref # 18049)	18049-1381	1
HOLDER-EXHAUST PIPE (Ref # 18069)	18069-1058	1
COVER-EXHAUST PIPE,FR (Ref # 49107)	49107-1071	1
COVER-EXHAUST PIPE,RR (Ref # 49107A)	49107-1072	1
NUT (Ref # 92015)	92015-1331	2
COLLAR (Ref # 92027)	92027-1873	2
CLAMP,42MM,BLACK (Ref # 92037)	92037-1350	1
DAMPER (Ref # 92075)	92075-013	2
BOLT-FLANGED,8X30 (Ref # 130)	130J0830	2
SCREW-PAN-WS-CROS (Ref # 223)	223C0610	4

© 2026 Kawasaki Motors Corp., U.S.A.