2003 Mojave 250

PARTS DIAGRAM

Balancer

E1323

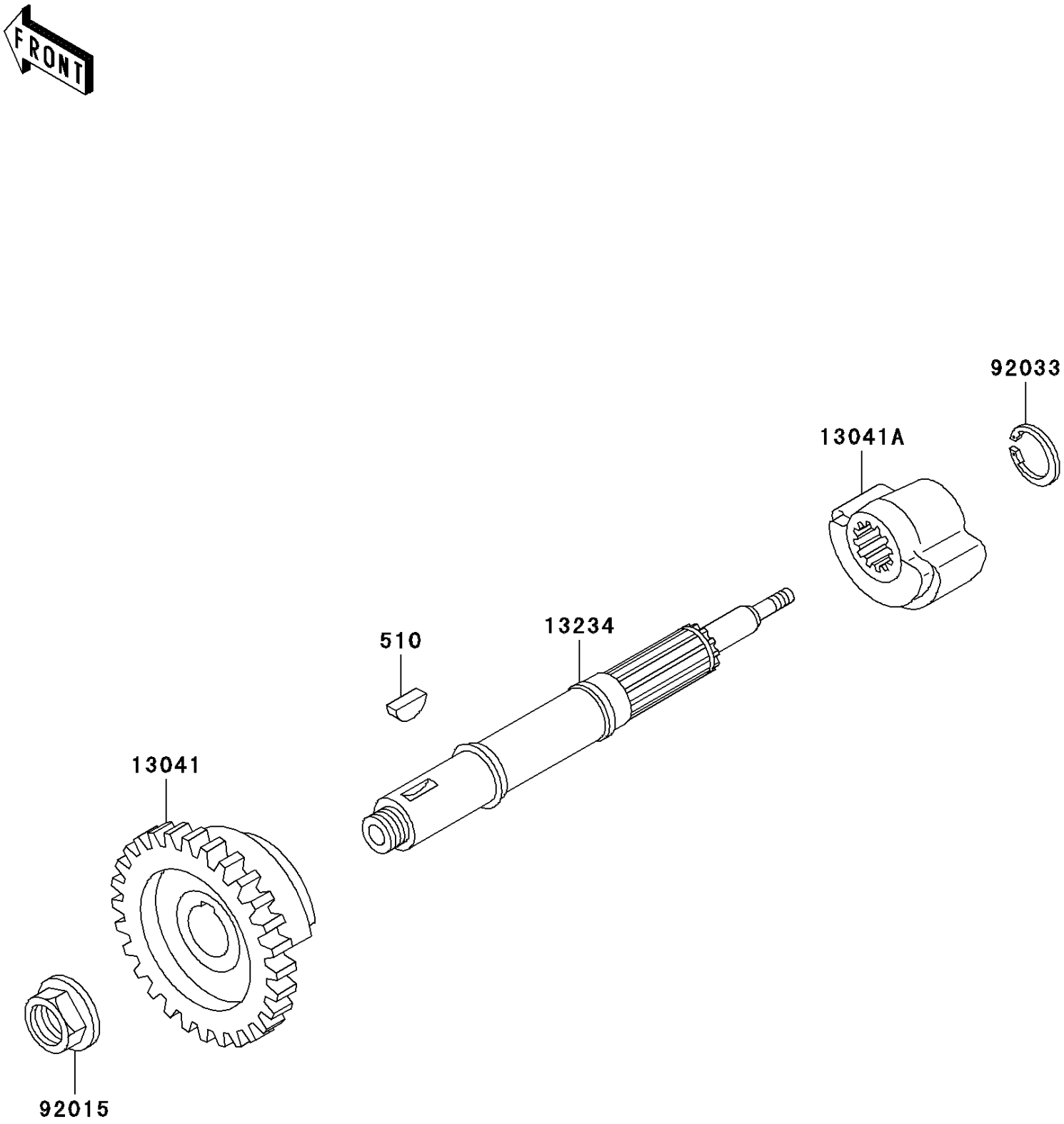

© 2026 Kawasaki Motors Corp., U.S.A.

2003 Mojave 250

PARTS LIST

Balancer

ITEM NAME	PART NUMBER	QUANTITY
KEY-WOODRUFF (Ref # 510)	510A5100	1
BALANCER,LH (Ref # 13041)	13041-1073	1
BALANCER,RH (Ref # 13041A)	13041-1074	1
SHAFT-COMP (Ref # 13234)	13234-1066	1
NUT,16MM (Ref # 92015)	92015-1465	1
RING-SNAP,18MM (Ref # 92033)	92033-029	1

© 2026 Kawasaki Motors Corp., U.S.A.