# 2007 ZZR600

## PARTS DIAGRAM

### Crankcase Bolt Pattern

E1412

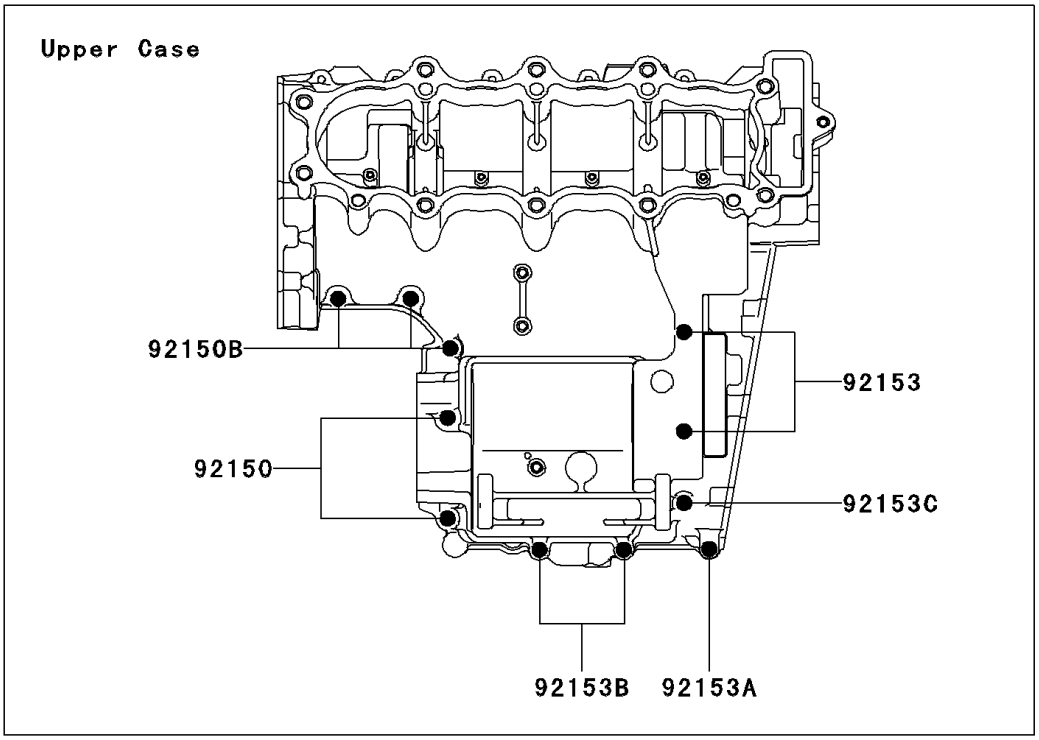


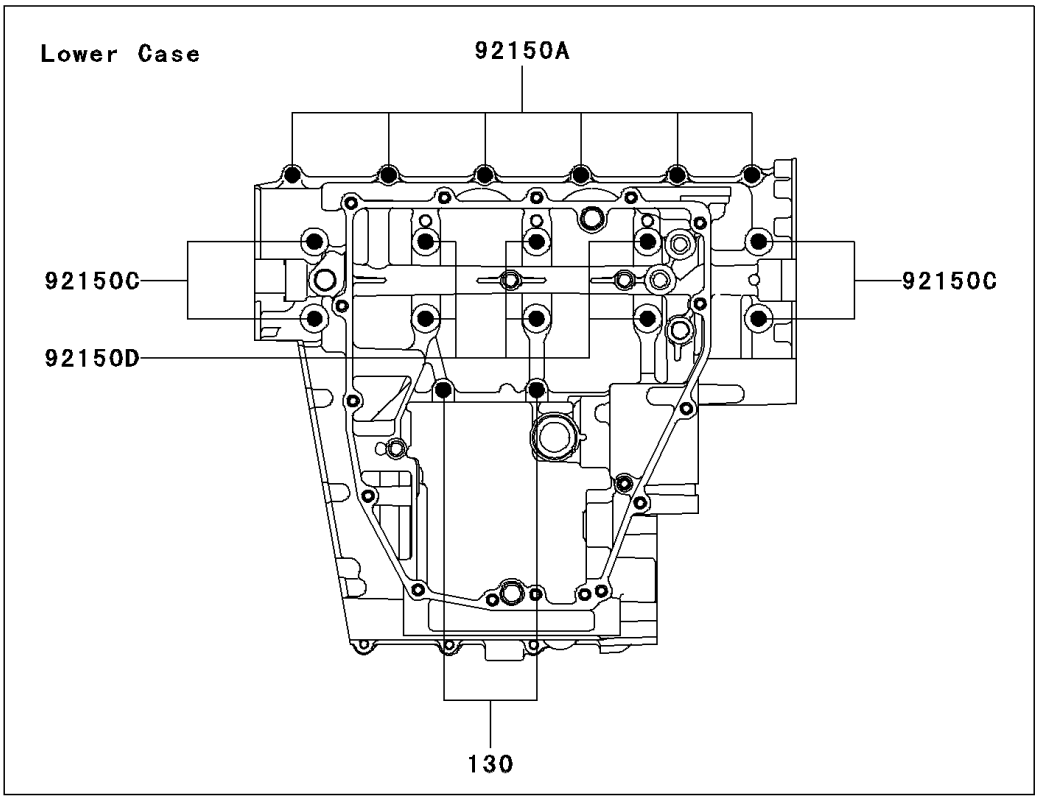


© 2026 Kawasaki Motors Corp., U.S.A.

# 2007 ZZR600

## PARTS LIST

### Crankcase Bolt Pattern

| ITEM NAME | PART NUMBER | QUANTITY |
|---|---|---|
| BOLT-FLANGED,6X75 (Ref # 130) | 130P0675 | 2 |
| BOLT,7X70 (Ref # 92150) | 92150-1250 | 2 |
| BOLT,6X38 (Ref # 92150A) | 92150-1301 | 6 |
| BOLT,6X35 (Ref # 92150B) | 92150-1547 | 3 |
| BOLT,8X99 (Ref # 92150C) | 92150-1856 | 4 |
| BOLT,8X76 (Ref # 92150D) | 92150-1857 | 6 |
| BOLT,6X95 (Ref # 92153) | 92153-0329 | 2 |
| BOLT,6X50,WHITE (Ref # 92153A) | 92153-0925 | 1 |
| BOLT,6X65,WHITE (Ref # 92153B) | 92153-0926 | 2 |
| BOLT,6X85,WHITE (Ref # 92153C) | 92153-0927 | 1 |

© 2026 Kawasaki Motors Corp., U.S.A.