1998 Mojave 250

PARTS DIAGRAM

Rear Hub

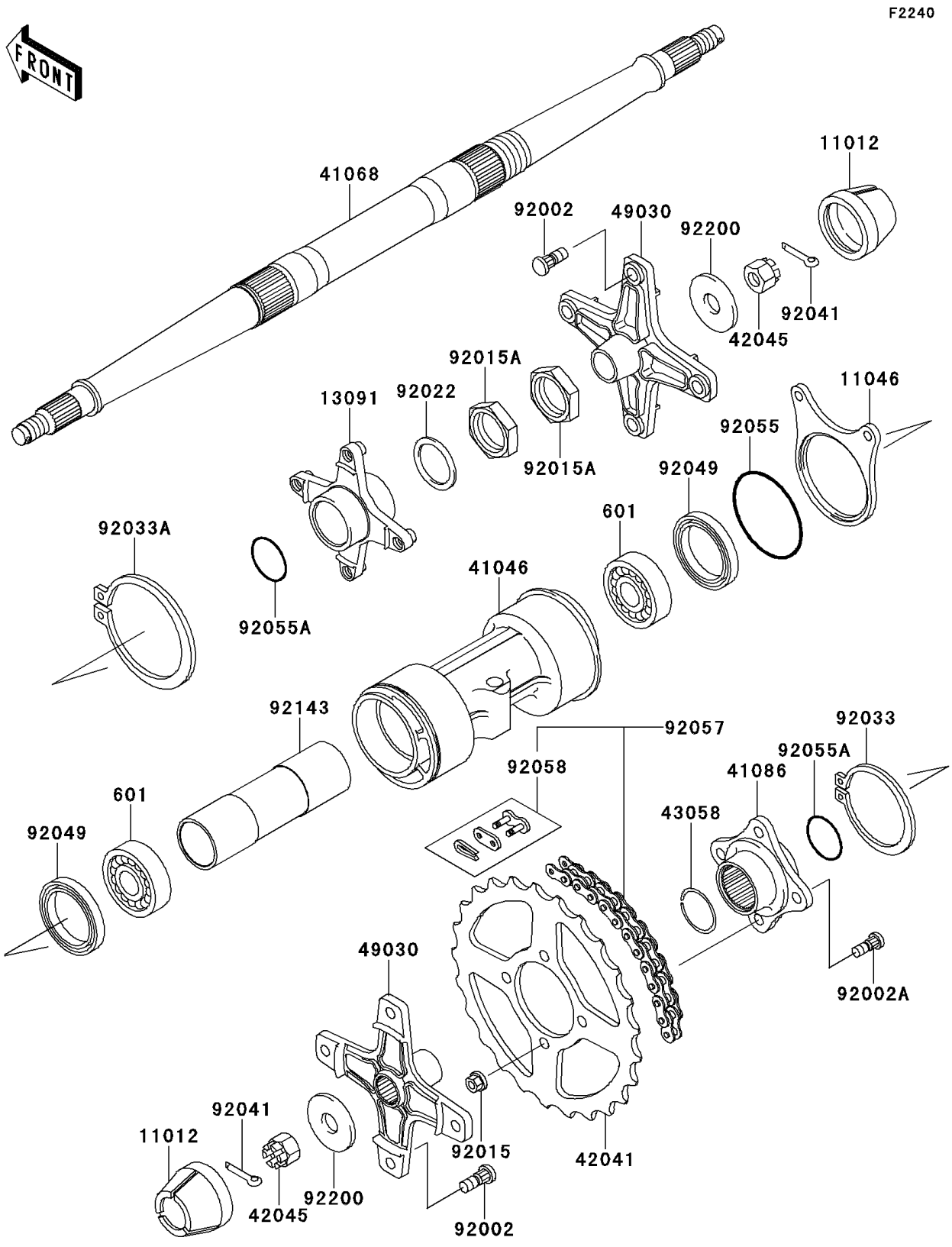

© 2026 Kawasaki Motors Corp., U.S.A.

1998 Mojave 250

PARTS LIST

Rear Hub

ITEM NAME	PART NUMBER	QUANTITY

© 2026 Kawasaki Motors Corp., U.S.A.