1998 Mojave 250

PARTS DIAGRAM

Footrests

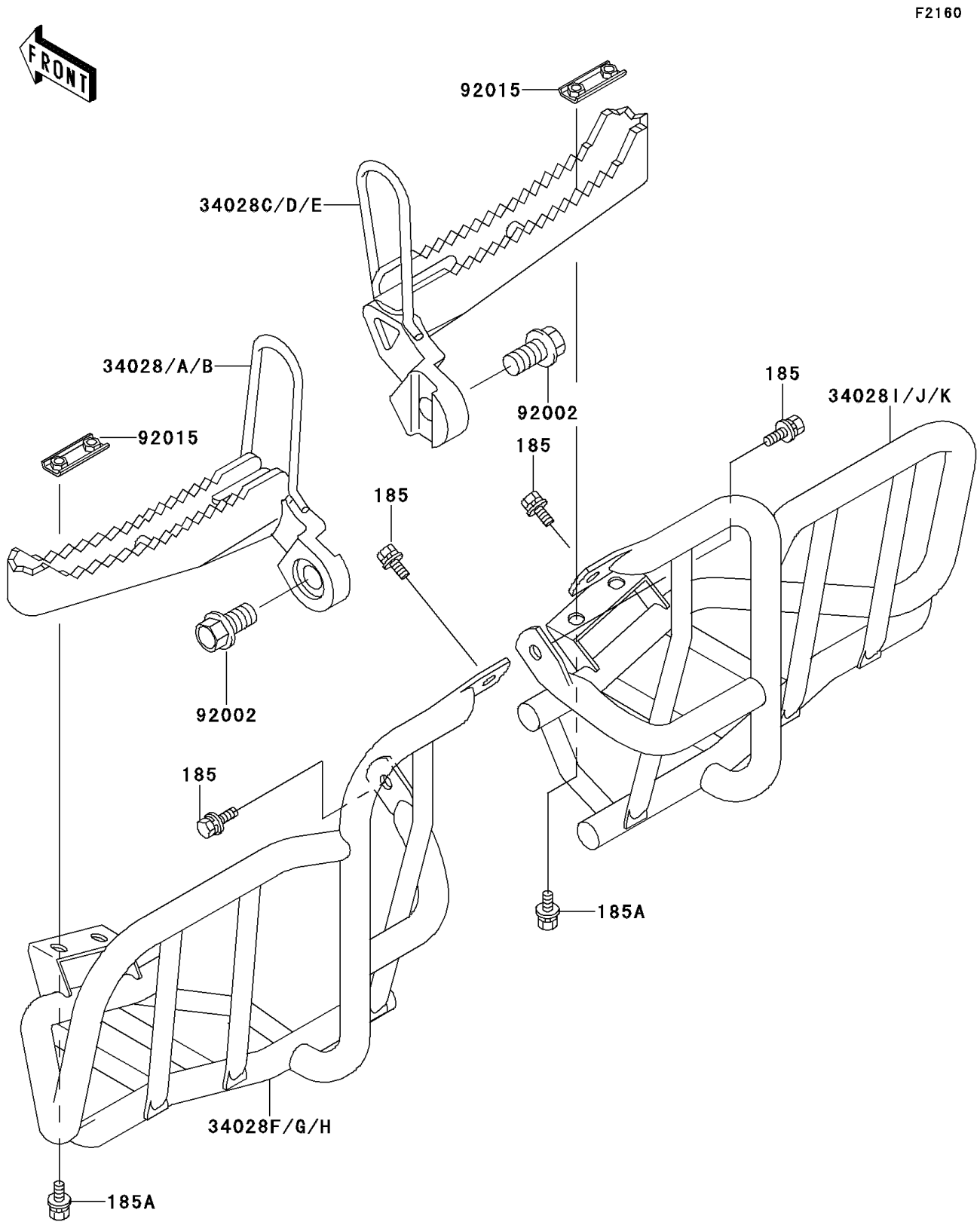

© 2026 Kawasaki Motors Corp., U.S.A.

1998 Mojave 250

PARTS LIST

Footrests

ITEM NAME	PART NUMBER	QUANTITY

© 2026 Kawasaki Motors Corp., U.S.A.