2015 KLX150L (Latin America)

PARTS DIAGRAM

Footrests

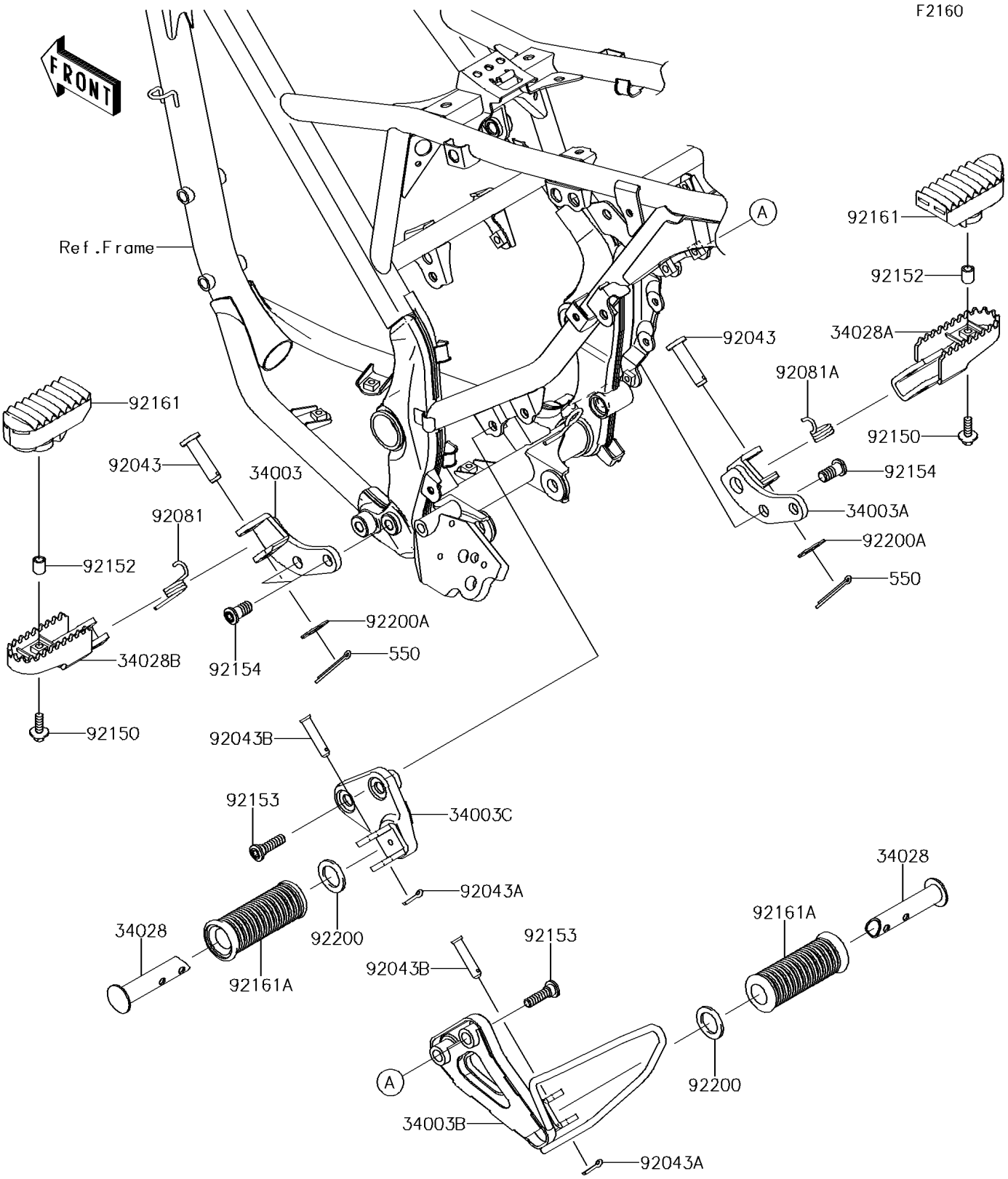

© 2026 Kawasaki Motors Corp., U.S.A.

2015 KLX150L (Latin America)

PARTS LIST

Footrests

ITEM NAME	PART NUMBER	QUANTITY

© 2026 Kawasaki Motors Corp., U.S.A.