2016 KLX®150L

PARTS DIAGRAM

Starter Motor

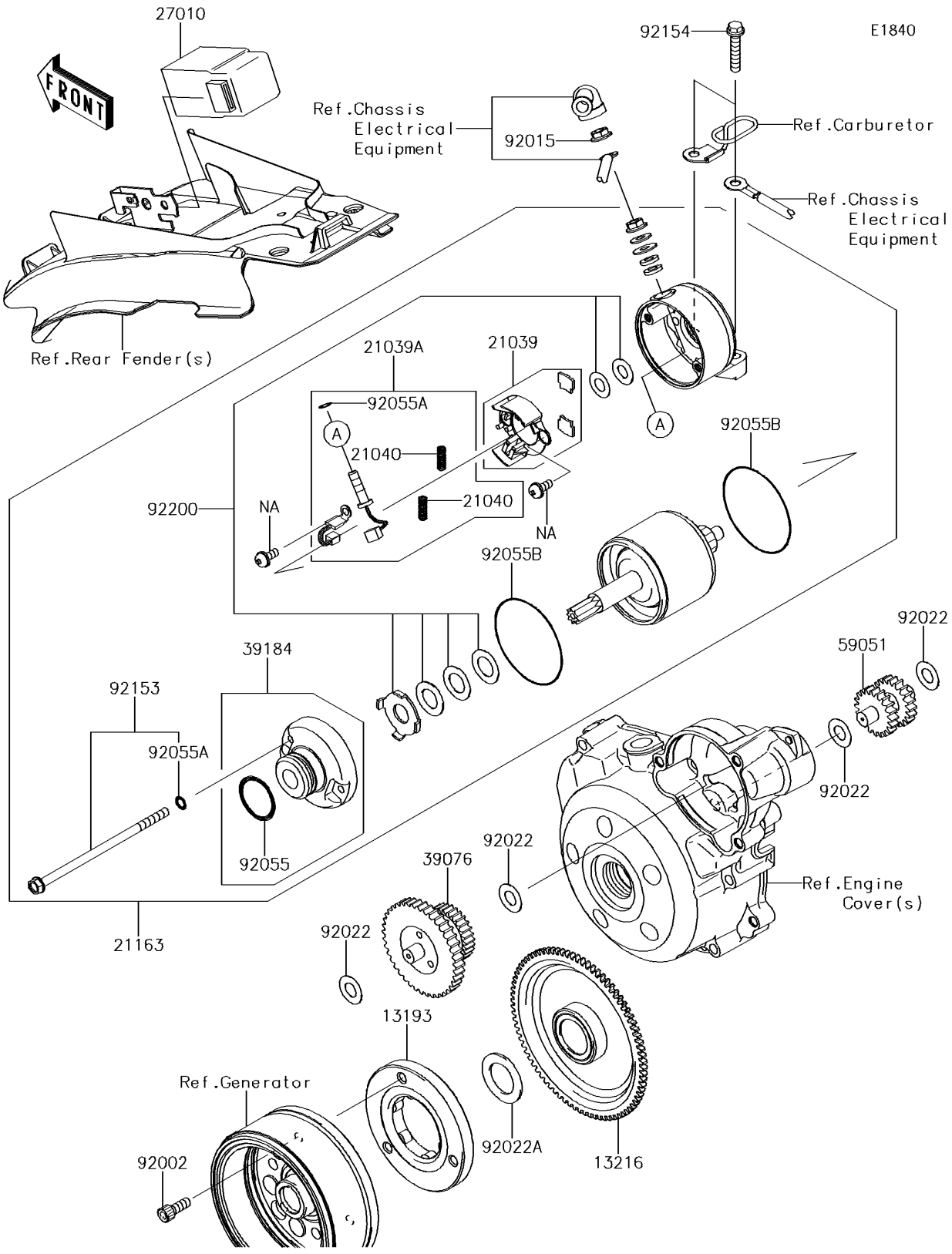

© 2026 Kawasaki Motors Corp., U.S.A.

2016 KLX®150L

PARTS LIST

Starter Motor

ITEM NAME	PART NUMBER	QUANTITY
CLUTCH-ASSY-ONEWAY (Ref # 13193)	13193-0009	1
GEAR-COMP,FREE WHEEL (Ref # 13216)	13216-0888	1
BRUSH (Ref # 21039)	21039-0007	1
BRUSH (Ref # 21039A)	21039-0008	1
SPRING-BRUSH (Ref # 21040)	21040-0004	2
STARTER-ELECTRIC (Ref # 21163)	21163-0058	1
SWITCH (Ref # 27010)	27010-0085	1
LIMITER,STARTER IDLE GEAR (Ref # 39076)	39076-0030	1
BRACKET-ASSY (Ref # 39184)	39184-0015	1
GEAR-SPUR,IDLE (Ref # 59051)	59051-1304	1
BOLT,SOCKET,6X16 (Ref # 92002)	92002-1778	3
NUT,FLANGED,6MM (Ref # 92015)	92015-1367	1
WASHER,10.2X20X0.5 (Ref # 92022)	92022-1649	4
WASHER,22.3X35X1.6 (Ref # 92022A)	92022-212	1
RING-O (Ref # 92055)	92055-1276	1
RING-O,4.5X2.0 (Ref # 92055A)	92055-1370	3
RING-O (Ref # 92055B)	92055-1550	2
BOLT (Ref # 92153)	92153-1914	2
BOLT,FLANGED,6X30 (Ref # 92154)	92154-1159	2
WASHER,SET (Ref # 92200)	92200-0407	1

© 2026 Kawasaki Motors Corp., U.S.A.