2006 ZZR600

PARTS DIAGRAM

Cylinder/Piston(s)

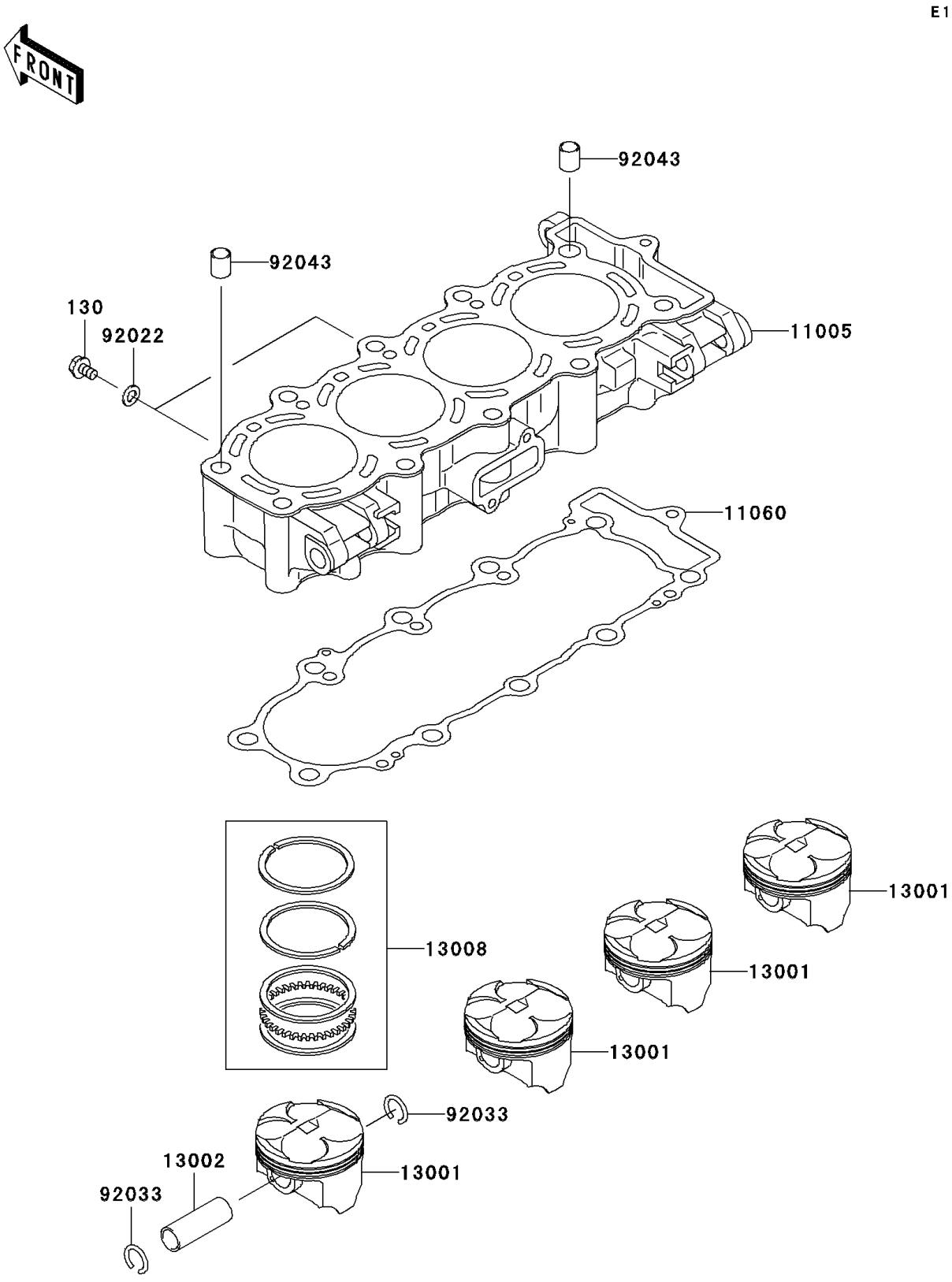

© 2026 Kawasaki Motors Corp., U.S.A.

2006 ZZR600

PARTS LIST

Cylinder/Piston(s)

ITEM NAME	PART NUMBER	QUANTITY
BOLT-FLANGED,6X10 (Ref # 130)	130Y0610	2
CYLINDER-ENGINE (Ref # 11005)	11005-1910	1
GASKET,CYLINDER BASE (Ref # 11060)	11060-1844	1
PISTON-ENGINE (Ref # 13001)	13001-1578	4
PIN-PISTON (Ref # 13002)	13002-1115	4
RING-SET-PISTON,STD (Ref # 13008)	13008-1161	4
WASHER,6.2X11X1 (Ref # 92022)	92022-304	2
RING-SNAP,PISTON PIN (Ref # 92033)	92033-1161	8
PIN,10.1X12X14 (Ref # 92043)	92043-4009	2

© 2026 Kawasaki Motors Corp., U.S.A.