2015 JET SKI® ULTRA® 310X SE

Kawasaki
Let the Good Times Roll®

PARTS DIAGRAM

Fuel Injection

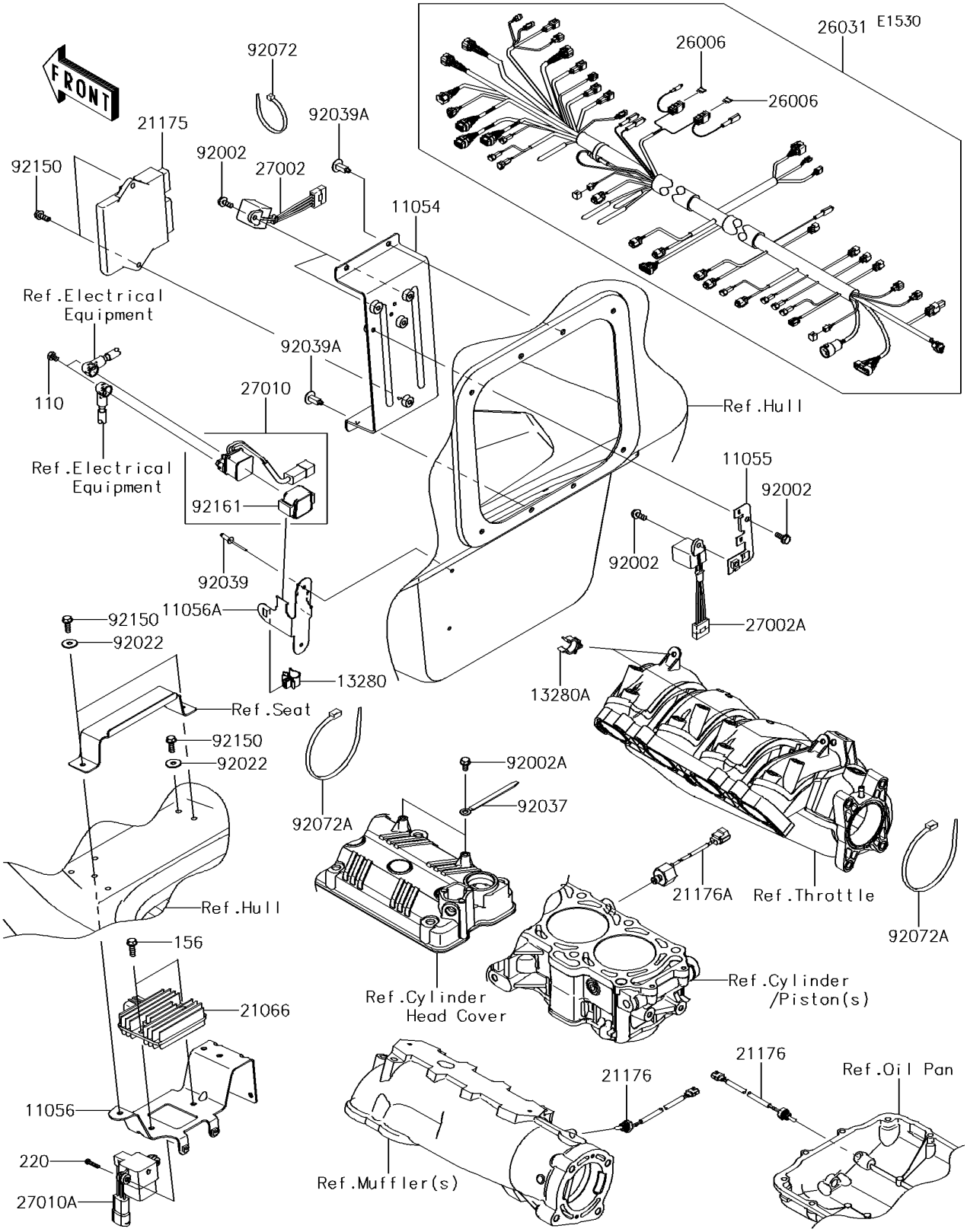

© 2026 Kawasaki Motors Corp., U.S.A.

2015 JET SKI® ULTRA® 310X SE

PARTS LIST

Fuel Injection

ITEM NAME	PART NUMBER	QUANTITY

© 2026 Kawasaki Motors Corp., U.S.A.