2016 JET SKI® ULTRA® 310LX

PARTS DIAGRAM

Other(Speaker)

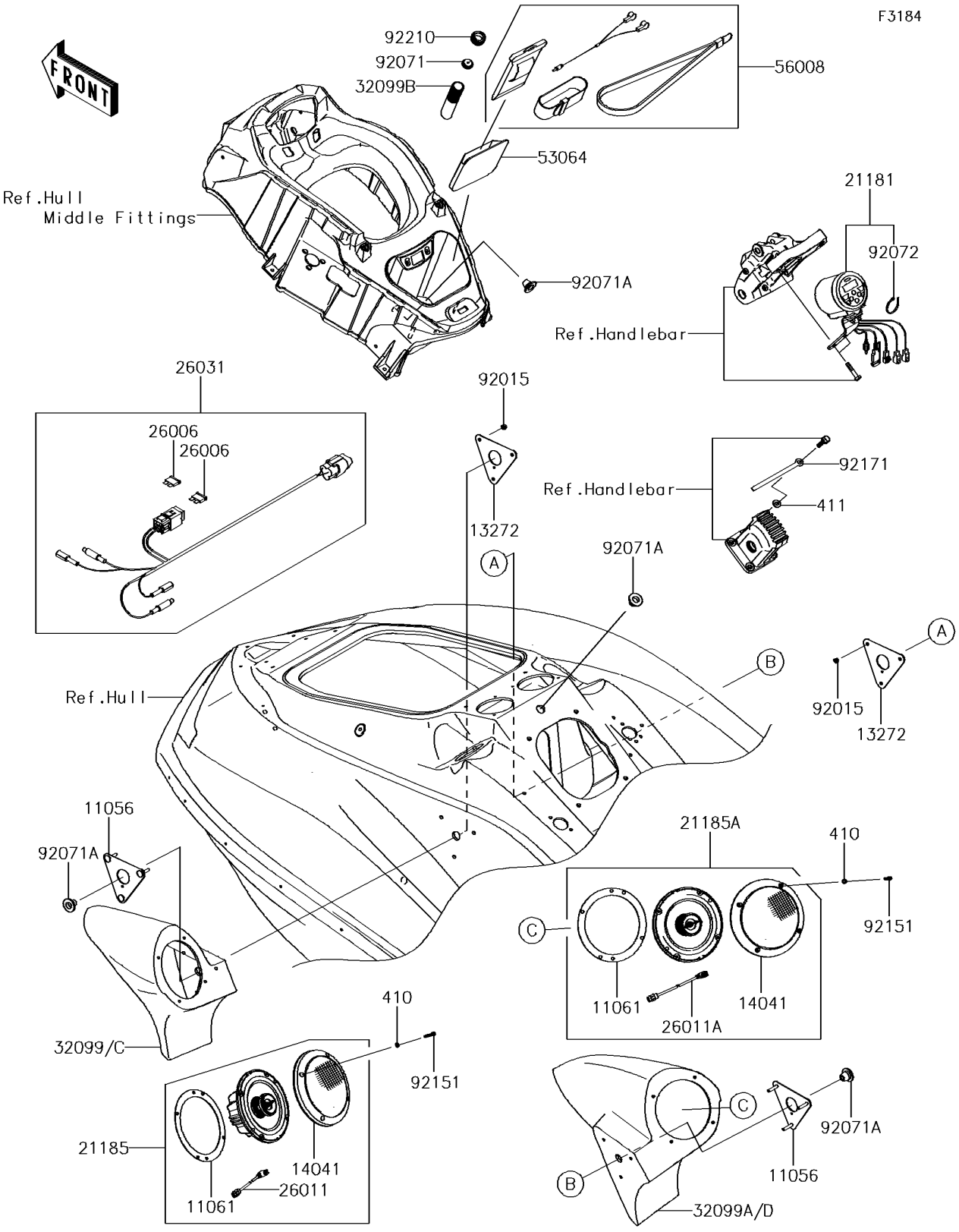

© 2026 Kawasaki Motors Corp., U.S.A.

2016 JET SKI® ULTRA® 310LX

PARTS LIST

Other(Speaker)

ITEM NAME	PART NUMBER	QUANTITY
BRACKET,SPEAKER (Ref # 11056)	11056-2493	2
GASKET (Ref # 11061)	11061-0901	2
PLATE,SPEAKER (Ref # 13272)	13272-1703	2
COVER-COMP (Ref # 14041)	14041-0582	2
AMPLIFIER,WATERPROOF (Ref # 21181)	21181-0011	1
SPEAKER,LH (Ref # 21185)	21185-0002	1
SPEAKER,RH (Ref # 21185A)	21185-0003	1
FUSE,MINI BLADE,10A,RED (Ref # 26006)	26006-0009	2
WIRE-LEAD,YELLOW (Ref # 26011)	26011-0849	1
WIRE-LEAD,L.GRAY (Ref # 26011A)	26011-0850	1
HARNESS,AUDIO (Ref # 26031)	26031-1574	1
CASE,SPEAKER,LH,EBONY (Ref # 32099)	32099-0736-H8	1
CASE,SPEAKER,RH,EBONY (Ref # 32099A)	32099-0737-H8	1
CASE,USB (Ref # 32099B)	32099-0751	1
W-PLAIN-S,5MM (Ref # 410)	410S0500	8
WASHER-PLAIN,8MM (Ref # 411)	411S0800	1
NET-CARGO (Ref # 53064)	53064-0013	1
BAG,WATERPROOF MUSIC (Ref # 56008)	56008-0042	1
NUT,LOCK,6MM (Ref # 92015)	92015-3766	6
GROMMET,USB OUTLET (Ref # 92071)	92071-0734	1
GROMMET (Ref # 92071A)	92071-3826	4
BAND,L=188.85 (Ref # 92072)	92072-0105	1
BOLT,SOCKET,5X25 (Ref # 92151)	92151-3709	8
CLAMP,L=150 (Ref # 92171)	92171-3717	1
NUT (Ref # 92210)	92210-3784	1

© 2026 Kawasaki Motors Corp., U.S.A.