2016 JET SKI® ULTRA® 310LX

PARTS DIAGRAM

Engine Cover(s)

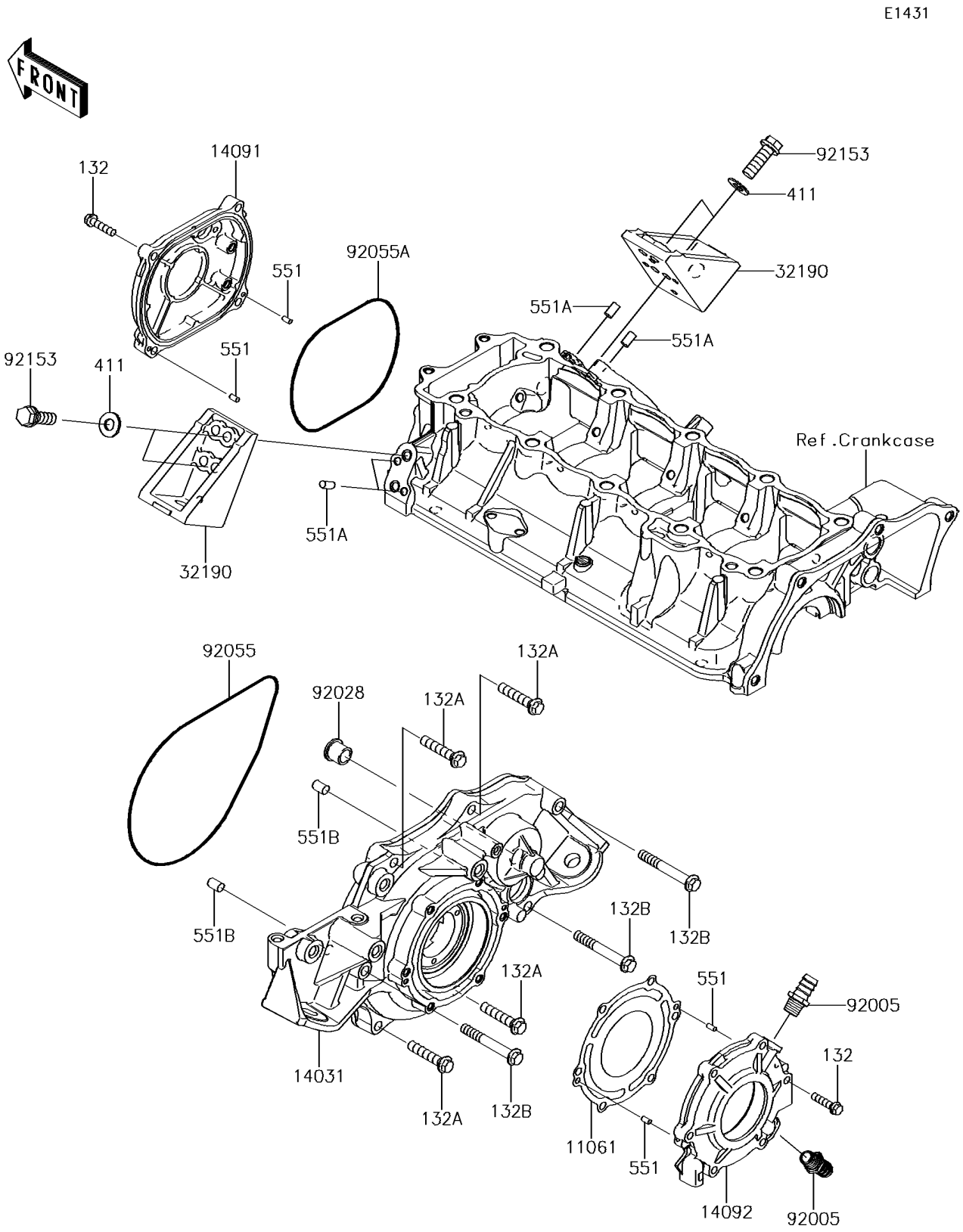

© 2026 Kawasaki Motors Corp., U.S.A.

2016 JET SKI® ULTRA® 310LX

PARTS LIST

Engine Cover(s)

ITEM NAME	PART NUMBER	QUANTITY
GASKET,OUTPUT COVER (Ref # 11061)	11061-0812	1
BOLT-FLANGED-SMALL,6X25 (Ref # 132)	132BD0625	10
BOLT-FLANGED-SMALL,8X40 (Ref # 132A)	132BD0840	4
BOLT-FLANGED-SMALL,8X60 (Ref # 132B)	132BD0860	3
COVER-GENERATOR (Ref # 14031)	14031-3738	1
COVER,PULS (Ref # 14091)	14091-3763	1
COVER,OUTPUT (Ref # 14092)	14092-1048	1
BRACKET-ENGINE (Ref # 32190)	32190-3703	2
WASHER-PLAIN,8MM (Ref # 411)	411S0800	4
PIN-DOWEL (Ref # 551)	551R0408	4
PIN-DOWEL (Ref # 551A)	551R0612	4
PIN-DOWEL (Ref # 551B)	551R0812	2
FITTING (Ref # 92005)	92005-3714	2
BUSHING (Ref # 92028)	92028-3718	1
RING-O,196X3 (Ref # 92055)	92055-3761	1
RING-O,120X3 (Ref # 92055A)	92055-3762	1
BOLT,FLANGED,8X30 (Ref # 92153)	92153-3722	4

© 2026 Kawasaki Motors Corp., U.S.A.