2014 JET SKI® ULTRA® 310X

PARTS DIAGRAM

Meters

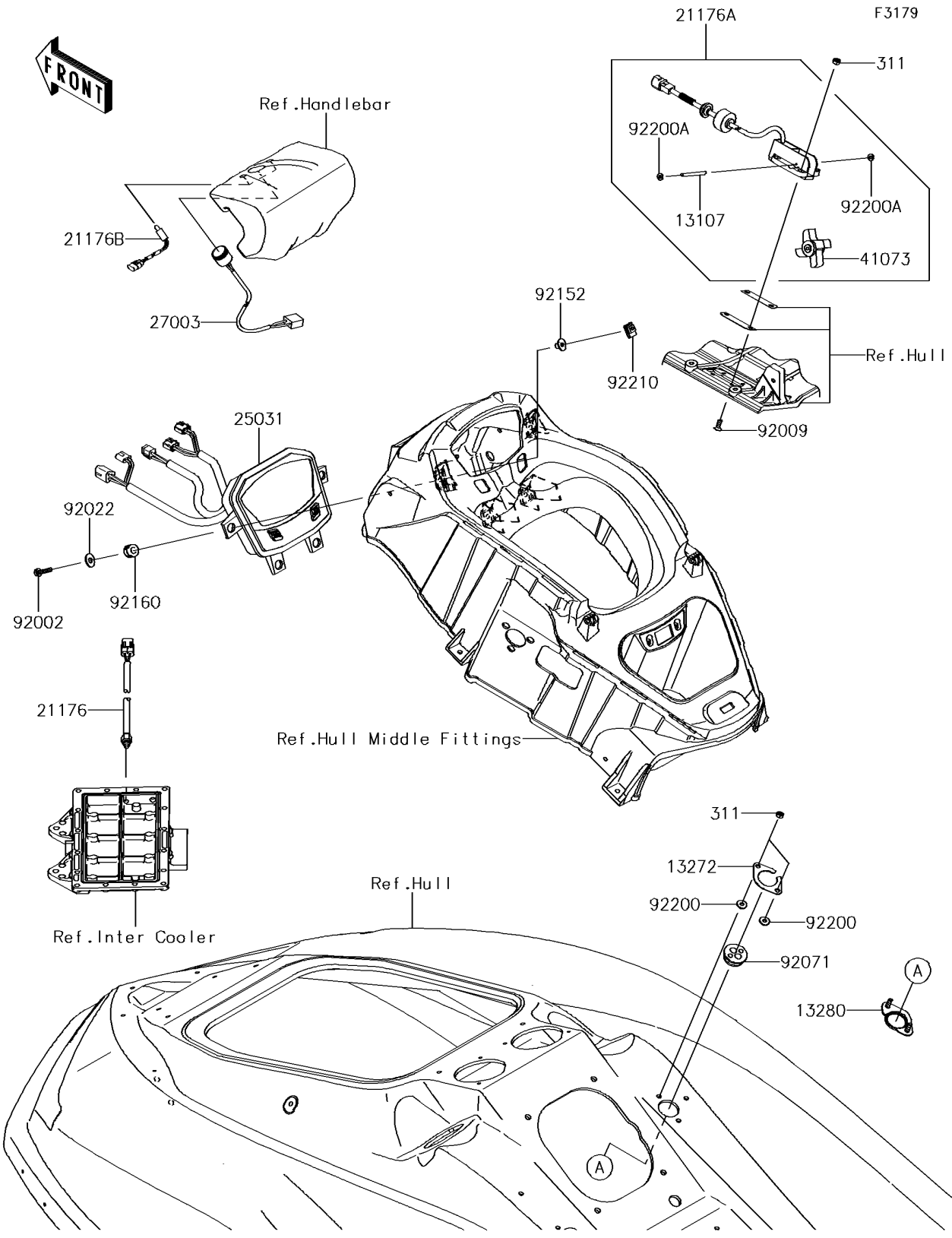

© 2026 Kawasaki Motors Corp., U.S.A.

2014 JET SKI® ULTRA® 310X

PARTS LIST

Meters

ITEM NAME	PART NUMBER	QUANTITY
SHAFT (Ref # 13107)	13107-3807	1
PLATE (Ref # 13272)	13272-3729	1
HOLDER (Ref # 13280)	13280-0724	1
SENSOR,TEMP (Ref # 21176)	21176-0072	1
SENSOR,SPEED (Ref # 21176A)	21176-3775	1
SENSOR,AIR TEMP (Ref # 21176B)	21176-3778	2
METER-ASSY (Ref # 25031)	25031-0689	1
HORN (Ref # 27003)	27003-3706	1
NUT-HEX,6MM (Ref # 311)	311R0600	6
WHEEL-ASSY,PADDLE (Ref # 41073)	41073-3701	1
BOLT,6X25 (Ref # 92002)	92002-3714	4
SCREW,6X16 (Ref # 92009)	92009-3703	4
WASHER,6.5X20X1.5 (Ref # 92022)	92022-3710	4
GROMMET,HARNESS (Ref # 92071)	92071-3790	1
COLLAR (Ref # 92152)	92152-3755	4
DAMPER,10X20X12 (Ref # 92160)	92160-1167	4
WASHER,6.5X16X2.0 (Ref # 92200)	92200-1543	2
WASHER (Ref # 92200A)	92200-3805	2
NUT,6MM (Ref # 92210)	92210-3768	4

© 2026 Kawasaki Motors Corp., U.S.A.