2016 JET SKI® ULTRA® 310X

PARTS DIAGRAM

Engine Mount

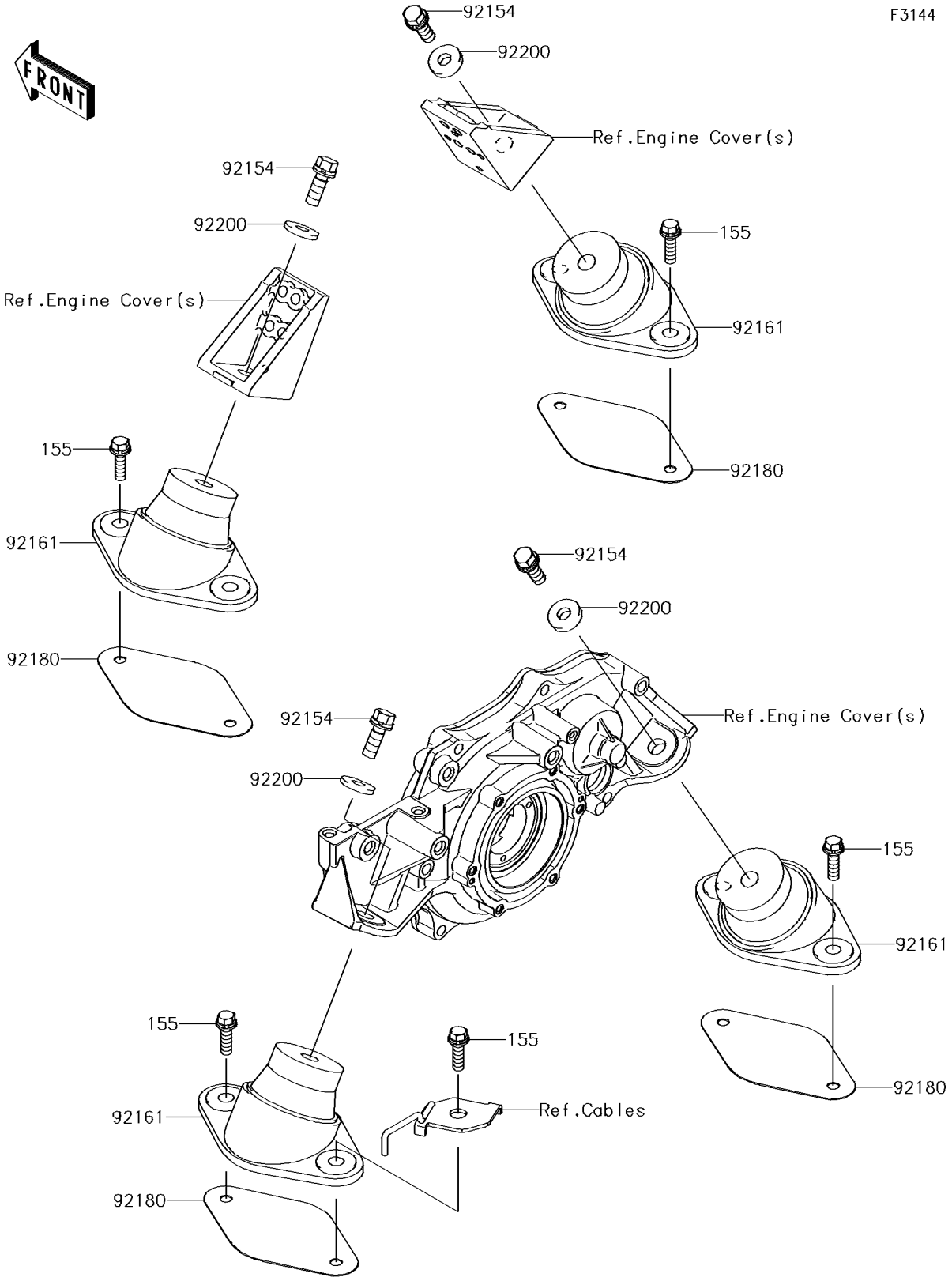

© 2026 Kawasaki Motors Corp., U.S.A.

2016 JET SKI® ULTRA® 310X

PARTS LIST

Engine Mount

ITEM NAME	PART NUMBER	QUANTITY
BOLT-WSP-SMALL,8X30 (Ref # 155)	155R0830	8
BOLT,WSP,10X30 (Ref # 92154)	92154-3715	4
DAMPER,ENGINE MOUNT (Ref # 92161)	92161-3789	4
SHIM,T=1.0 (Ref # 92180)	92180-3716	AR
WASHER,10.5X26X4 (Ref # 92200)	92200-3798	4

© 2026 Kawasaki Motors Corp., U.S.A.