2013 JET SKI® Ultra® LX

PARTS DIAGRAM

Electrical Equipment

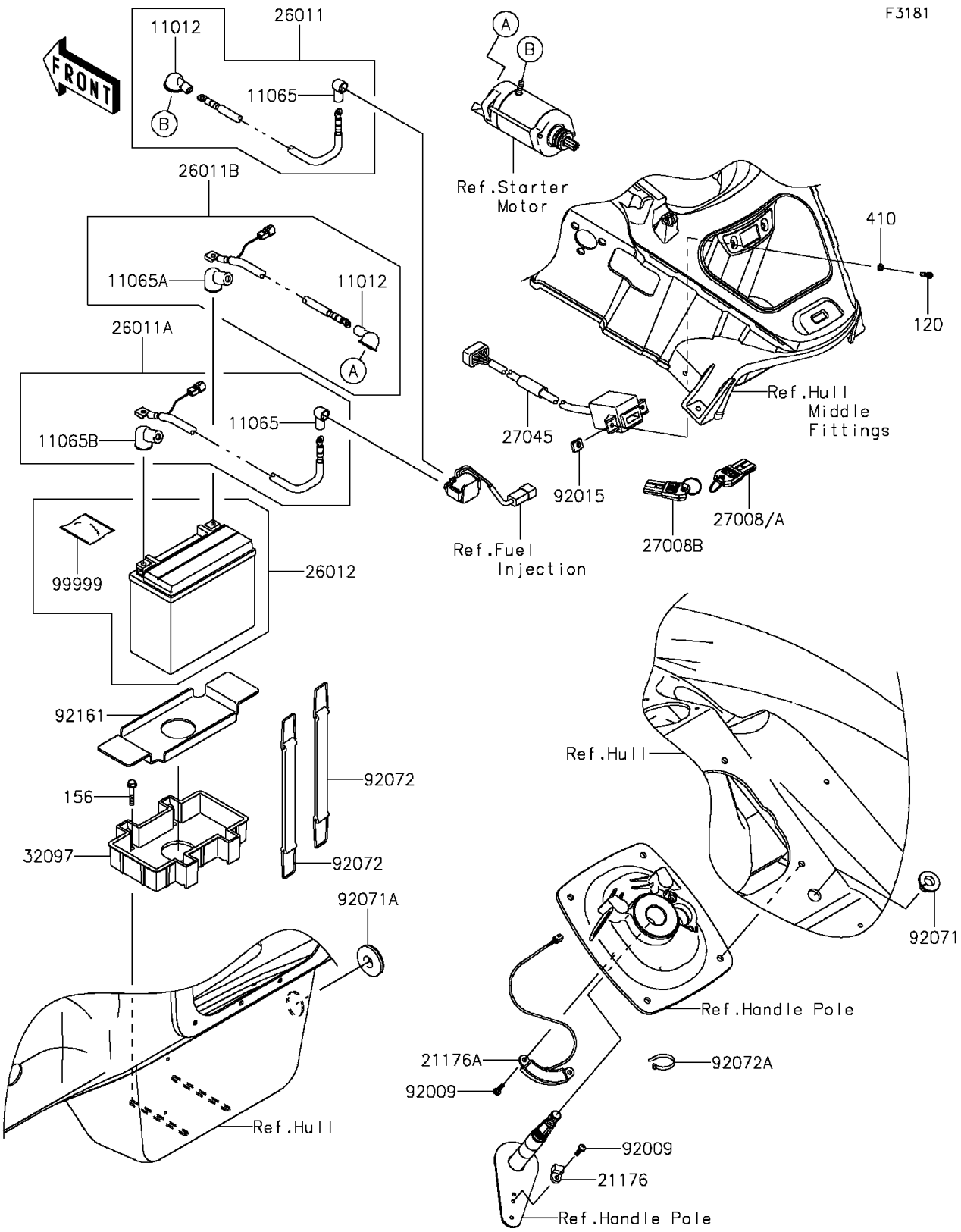

© 2026 Kawasaki Motors Corp., U.S.A.

2013 JET SKI® Ultra® LX

PARTS LIST

Electrical Equipment

Kawasaki
Let the Good Times Roll®

ITEM NAME	PART NUMBER	QUANTITY
CAP (Ref # 11012)	11012-3004	2
CAP (Ref # 11065)	11065-3716	2
CAP,TERMINAL (Ref # 11065A)	11065-3729	1
CAP,TERMINAL (Ref # 11065B)	11065-3732	1
BOLT-SOCKET,5X16 (Ref # 120)	120R0516	2
BOLT-WP,6X35 (Ref # 156)	156R0635	4
SENSOR,MAGNET (Ref # 21176)	21176-3746	1
SENSOR,HOLE IC (Ref # 21176A)	21176-3748	1
WIRE-LEAD,RELAY-STARTER (Ref # 26011)	26011-0723	1
WIRE-LEAD,RELAY-BATTERY(+) (Ref # 26011A)	26011-0749	1
WIRE-LEAD,BATTERY(-)-STARTER (Ref # 26011B)	26011-3915	1
BATTERY,YTX20L-BS,12V 18AH (Ref # 26012)	26012-3730	1
FPO MODE KEY (Ref # 27008A)	27008-3767	1
SLO MODE KEY (Ref # 27008B)	27008-3768	1
SWITCH-ASSY (Ref # 27045)	27045-0560	1
CASE-BATTERY (Ref # 32097)	32097-3709	1
W-PLAIN-S,5MM (Ref # 410)	410S0500	2
SCREW,5X16 (Ref # 92009)	92009-3868	3
NUT,CLIP,5MM (Ref # 92015)	92015-3830	2
GROMMET (Ref # 92071)	92071-3826	1
GROMMET (Ref # 92071A)	92071-3840	1
BAND,340X22 (Ref # 92072)	92072-3805	2
BAND,L=100.08 (Ref # 92072A)	92072-3882	1
DAMPER,BATTERY CASE (Ref # 92161)	92161-1388	1
BOLT NUT KIT (Ref # 99999)	99999-0311	1

© 2026 Kawasaki Motors Corp., U.S.A.