2013 JET SKI® Ultra® LX

PARTS DIAGRAM

Oil Pump

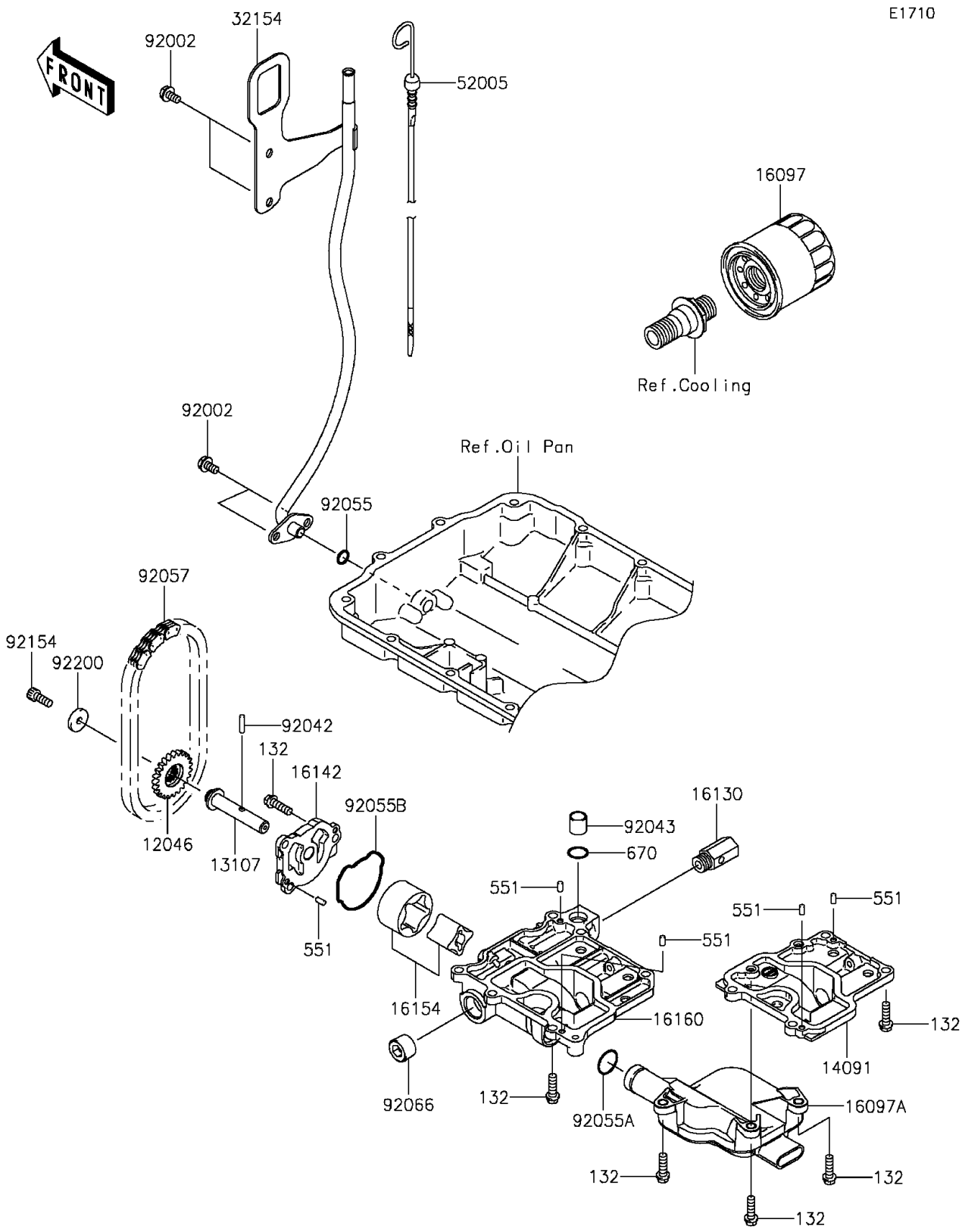

© 2026 Kawasaki Motors Corp., U.S.A.

2013 JET SKI® Ultra® LX

PARTS LIST

Oil Pump

ITEM NAME	PART NUMBER	QUANTITY
SPROCKET,23T (Ref # 12046)	12046-3708	1
SHAFT (Ref # 13107)	13107-0730	1
BOLT-FLANGED-SMALL,6X20 (Ref # 132)	132BD0620	16
COVER (Ref # 14091)	14091-3767	1
FILTER-ASSY-OIL (Ref # 16097)	16097-0007	1
FILTER-ASSY-OIL (Ref # 16097A)	16097-3702	1
VALVE-ASSY-RELIEF (Ref # 16130)	16130-3701	1
COVER-PUMP (Ref # 16142)	16142-3703	1
ROTOR-PUMP (Ref # 16154)	16154-1124	1
BODY,OIL PUMP (Ref # 16160)	16160-0705	1
PIPE,OIL LEVEL (Ref # 32154)	32154-3707	1
GAUGE,OIL LEVEL (Ref # 52005)	52005-3710	1
PIN-DOWEL (Ref # 551)	551R0408	5
O RING,14MM (Ref # 670)	670D2014	1
BOLT,6X12 (Ref # 92002)	92002-3763	4
PIN,DOWEL,4X15.8 (Ref # 92042)	92042-014	1
PIN,11.5X14X14 (Ref # 92043)	92043-1279	1
RING-O,9.8X2.4 (Ref # 92055)	92055-1150	1
RING-O,19.8X1.9 (Ref # 92055A)	92055-1332	1
RING-O (Ref # 92055B)	92055-3764	1
CHAIN,OIL PUMP,98XRH2010-52L (Ref # 92057)	92057-3713	1
PLUG,PT1/2X12.5 (Ref # 92066)	92066-0002	1
BOLT,SOCKET,6X16 (Ref # 92154)	92154-3709	1
WASHER,6X20X3.2 (Ref # 92200)	92200-0120	1

© 2026 Kawasaki Motors Corp., U.S.A.