# 2014 JET SKI® Ultra® LX

## PARTS DIAGRAM

### Cylinder/Piston(s)

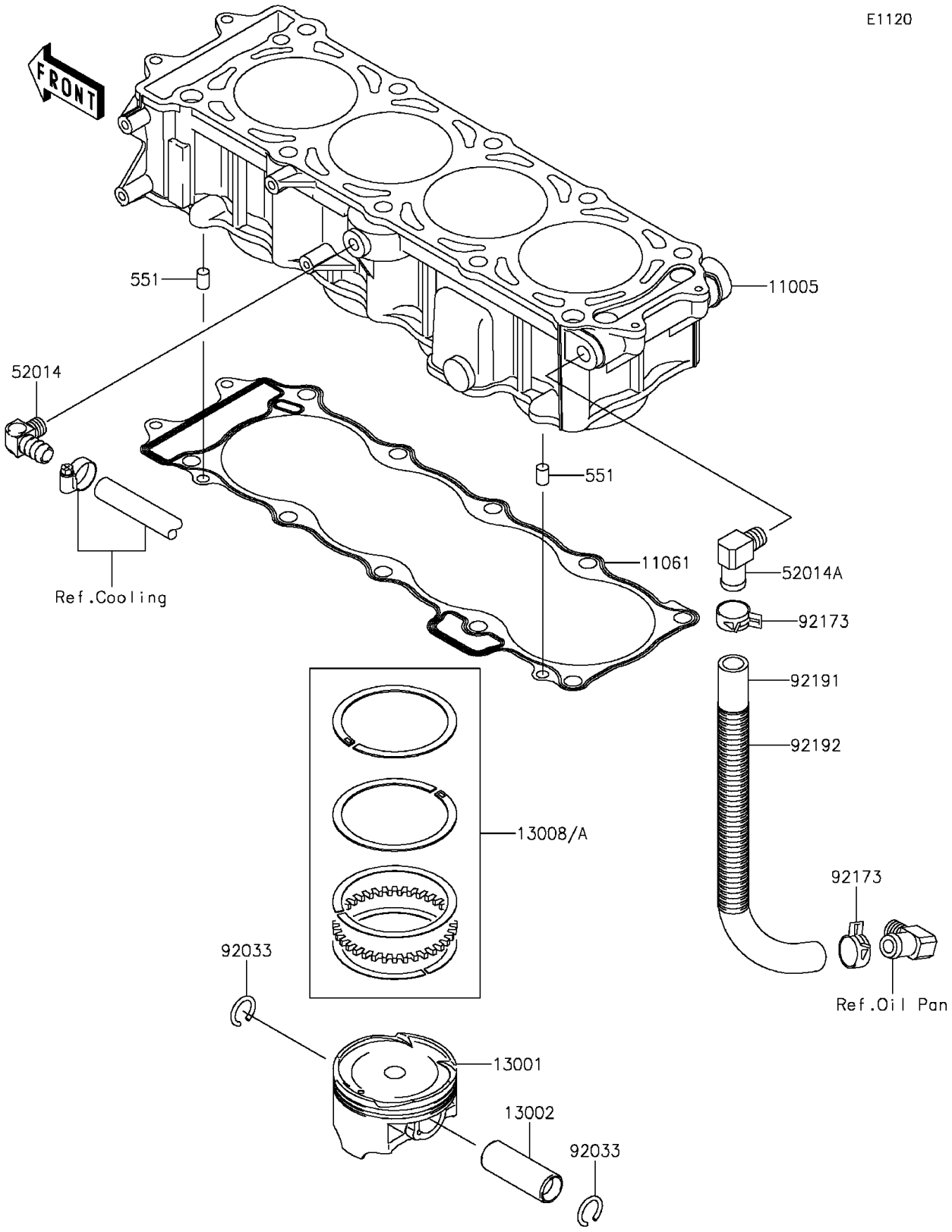


© 2026 Kawasaki Motors Corp., U.S.A.

# 2014 JET SKI® Ultra® LX

## PARTS LIST

### Cylinder/Piston(s)

| ITEM NAME | PART NUMBER | QUANTITY |
|---|---|---|
| CYLINDER-ENGINE (Ref # 11005) | 11005-3768 | 1 |
| GASKET,CYLINDER BASE (Ref # 11061) | 11061-3708 | 1 |
| PISTON-ENGINE (Ref # 13001) | 13001-3737 | 4 |
| PIN-PISTON (Ref # 13002) | 13002-3709 | 4 |
| RING-SET-PISTON (Ref # 13008) | 13008-0048 | 4 |
| ELBOW (Ref # 52014) | 52014-3711 | 1 |
| ELBOW (Ref # 52014A) | 52014-3717 | 1 |
| PIN-DOWEL (Ref # 551) | 551R0812 | 2 |
| RING-SNAP (Ref # 92033) | 92033-1188 | 8 |
| CLAMP (Ref # 92173) | 92173-1039 | 2 |
| TUBE,BREATHER (Ref # 92191) | 92191-3983 | 1 |
| TUBE,CORRUGATED,L=265 (Ref # 92192) | 92192-1083 | 1 |

© 2026 Kawasaki Motors Corp., U.S.A.