# 2012 TERYX® 750 FI 4x4 LE (SGE)

## PARTS DIAGRAM

### Drive Shaft-Propeller

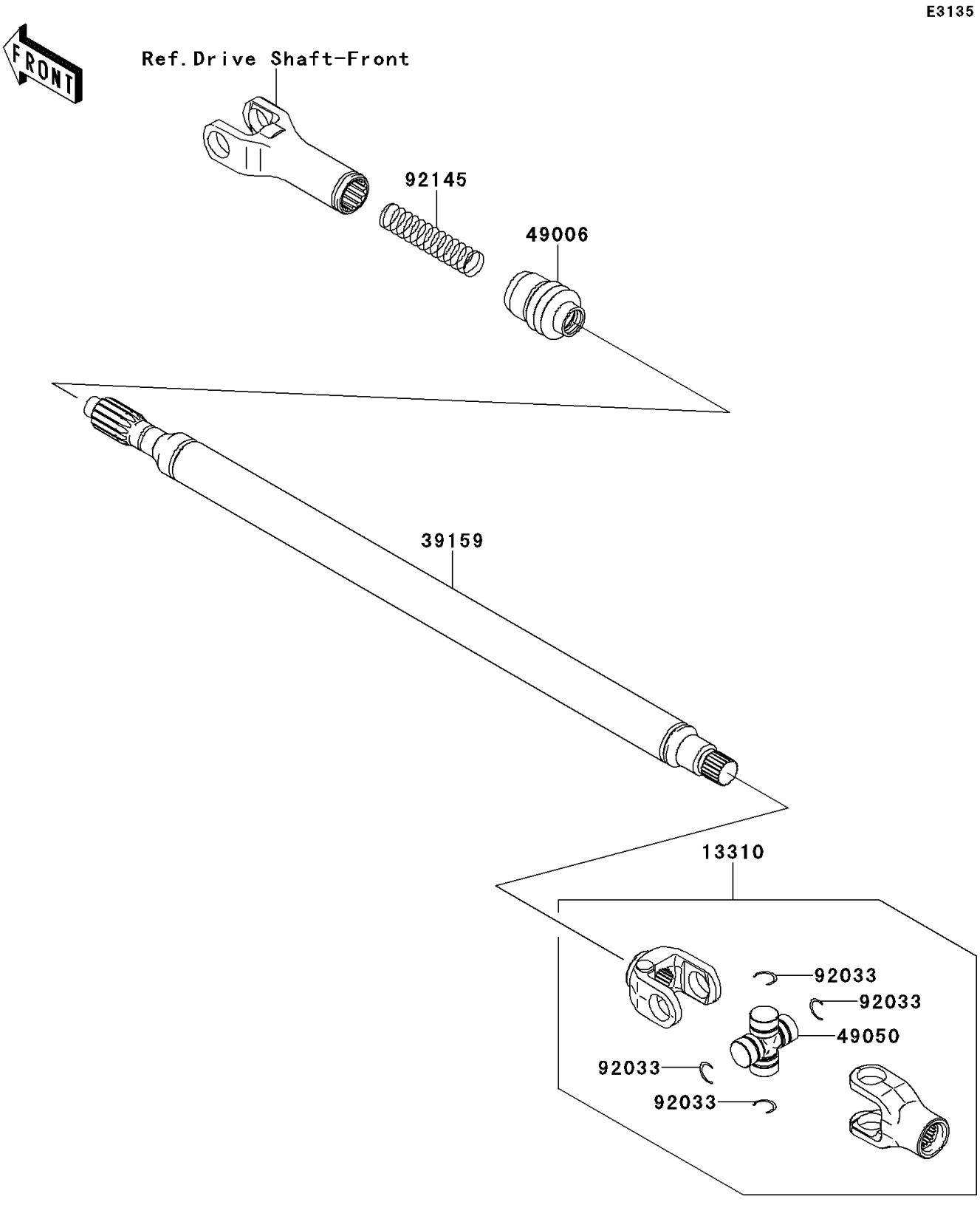


© 2026 Kawasaki Motors Corp., U.S.A.

# 2012 TERYX® 750 FI 4x4 LE (SGE)

## PARTS LIST

### Drive Shaft-Propeller

| ITEM NAME | PART NUMBER | QUANTITY |
|---|---|---|
| SHAFT-ASSY (Ref # 13310) | 13310-0017 | 1 |
| SHAFT-DRIVE (Ref # 39159) | 39159-0037 | 1 |
| BOOT (Ref # 49006) | 49006-0089 | 1 |
| SPIDER (Ref # 49050) | 49050-1075 | 1 |
| RING-SNAP (Ref # 92033) | 92033-1030 | 4 |
| SPRING (Ref # 92145) | 92145-0247 | 1 |

© 2026 Kawasaki Motors Corp., U.S.A.