2018 NINJA® 650 ABS KRT EDITION

PARTS DIAGRAM

Stand(s)

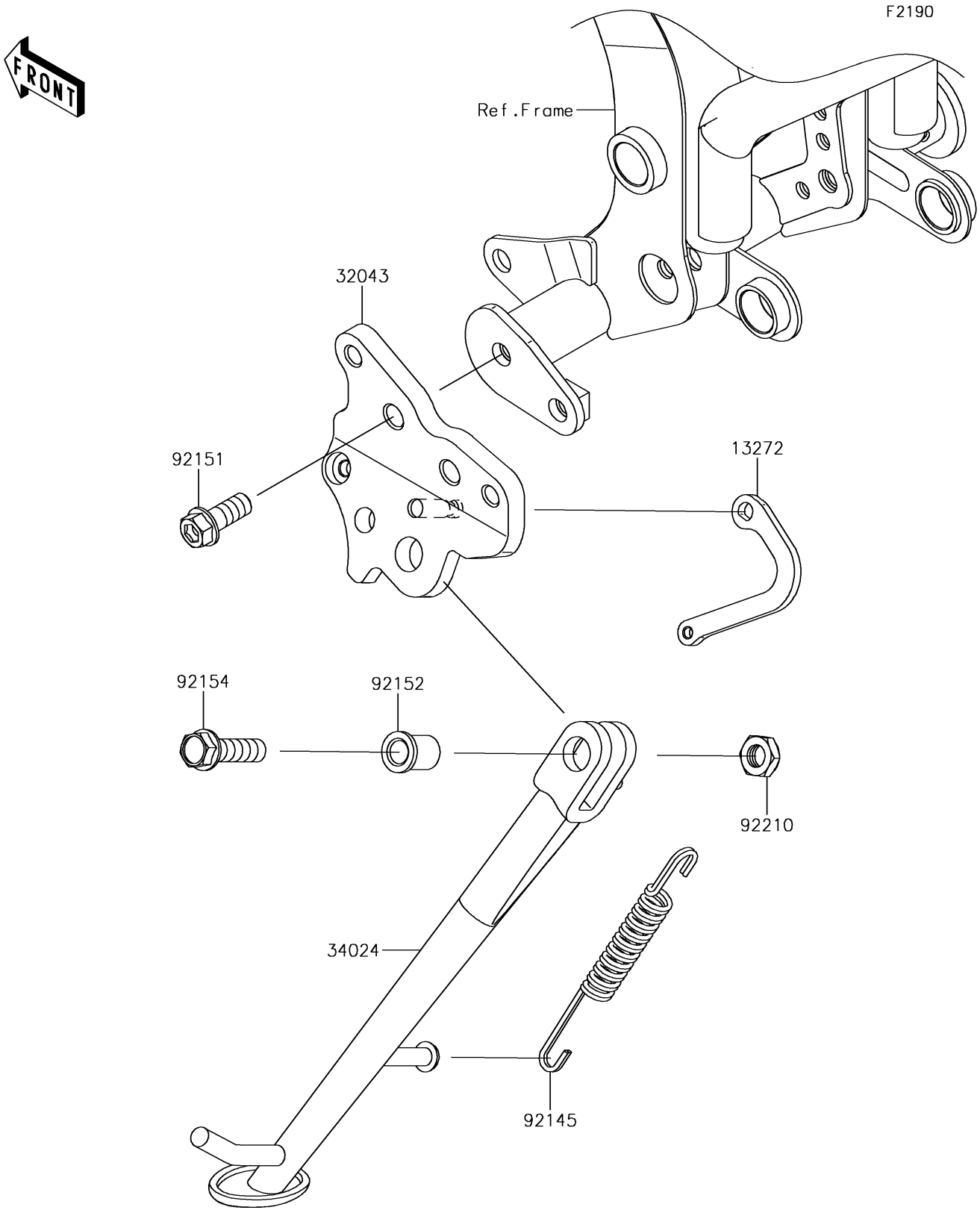

© 2026 Kawasaki Motors Corp., U.S.A.

2018 NINJA® 650 ABS KRT EDITION

Kawasaki
Let the Good Times Roll®

PARTS LIST

Stand(s)

ITEM NAME	PART NUMBER	QUANTITY
PLATE,SPRING (Ref # 13272)	13272-2166	1
BRACKET-STAND (Ref # 32043)	32043-0620	1
STAND-SIDE (Ref # 34024)	34024-0140	1
SPRING,SIDE STAND (Ref # 92145)	92145-1735	1
BOLT,FLANGED,10X25 (Ref # 92151)	92151-1802	2
COLLAR,10.2X18X20.1 (Ref # 92152)	92152-2299	1
BOLT,FLANGED,10X37 (Ref # 92154)	92154-1352	1
NUT,LOCK,10MM (Ref # 92210)	92210-0784	1

© 2026 Kawasaki Motors Corp., U.S.A.