2018 VERSYS® 1000 LT

PARTS DIAGRAM

Cylinder/Piston(s)

E1120

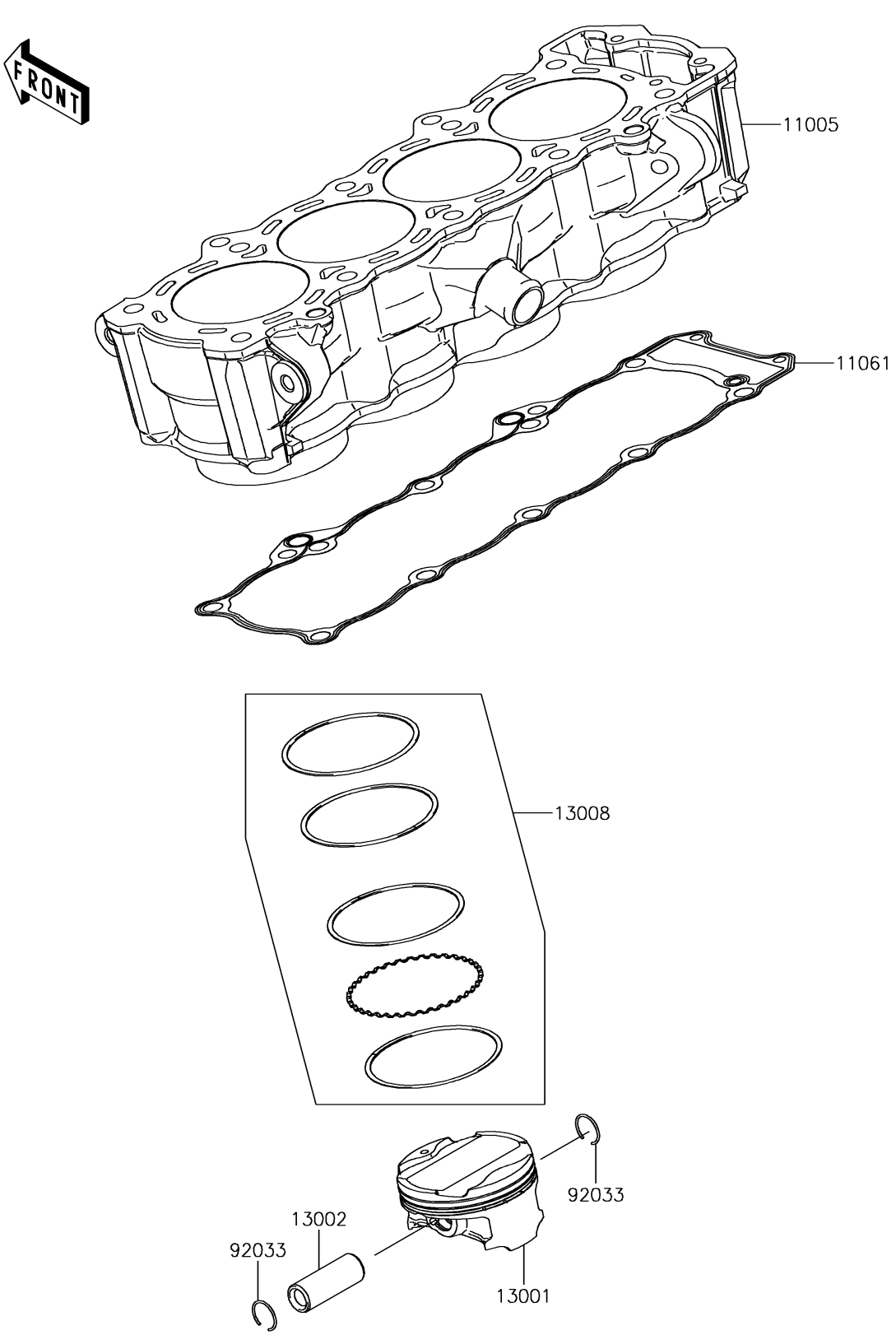

© 2026 Kawasaki Motors Corp., U.S.A.

2018 VERSYS® 1000 LT

PARTS LIST

Cylinder/Piston(s)

ITEM NAME	PART NUMBER	QUANTITY
CYLINDER-ENGINE (Ref # 11005)	11005-0648	1
GASKET,CYLINDER BASE (Ref # 11061)	11061-0402	1
PISTON-ENGINE (Ref # 13001)	13001-0729	4
PIN-PISTON (Ref # 13002)	13002-0004	4
RING-SET-PISTON (Ref # 13008)	13008-0573	4
RING-SNAP (Ref # 92033)	92033-1054	8

© 2026 Kawasaki Motors Corp., U.S.A.