2015 VERSYS® 1000 LT

PARTS DIAGRAM

Cowling Lowers

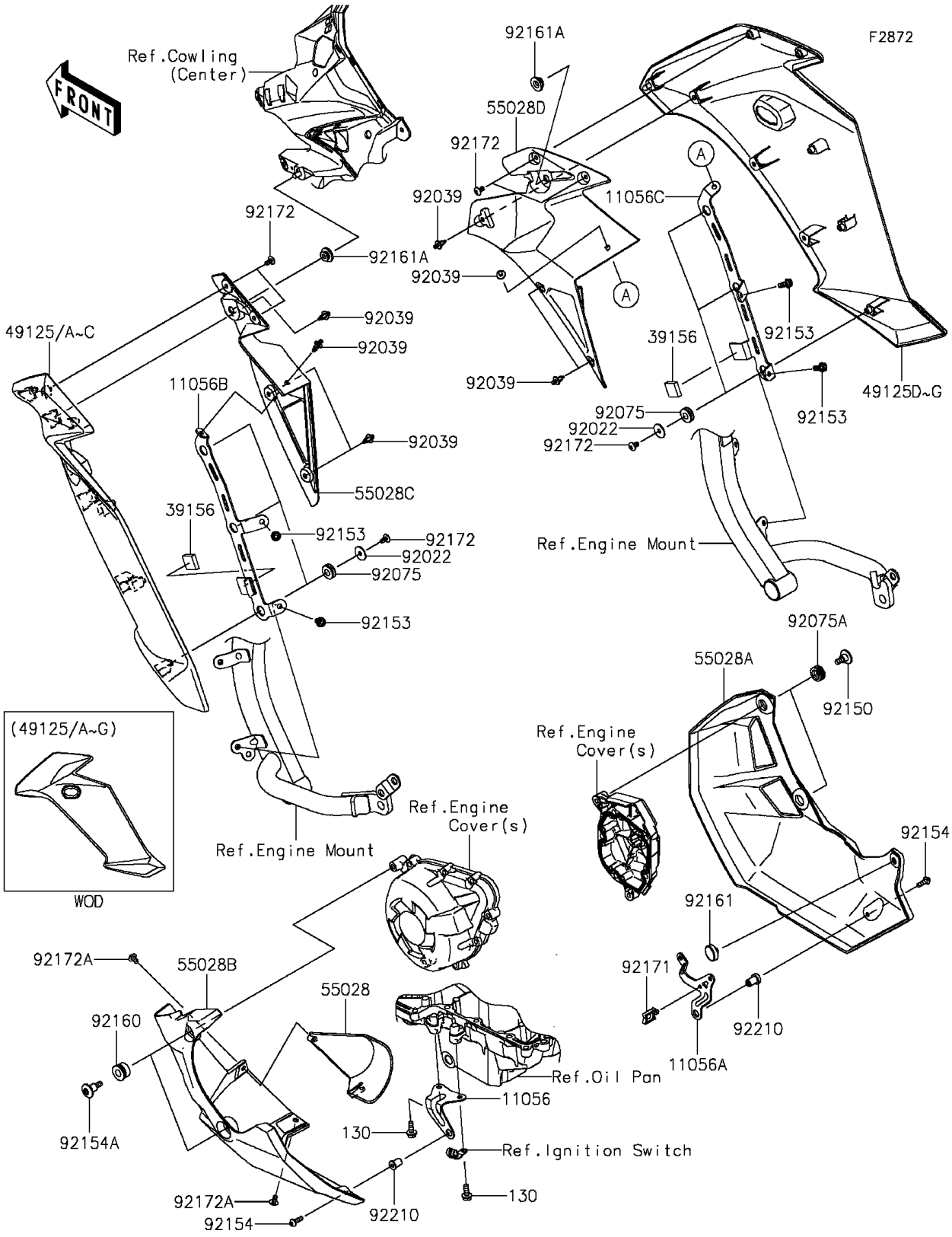

© 2026 Kawasaki Motors Corp., U.S.A.

2015 VERSYS® 1000 LT

PARTS LIST

Cowling Lowers

ITEM NAME	PART NUMBER	QUANTITY

© 2026 Kawasaki Motors Corp., U.S.A.