2015 VERSYS® 1000 ABS

PARTS DIAGRAM

Front Fender(s)

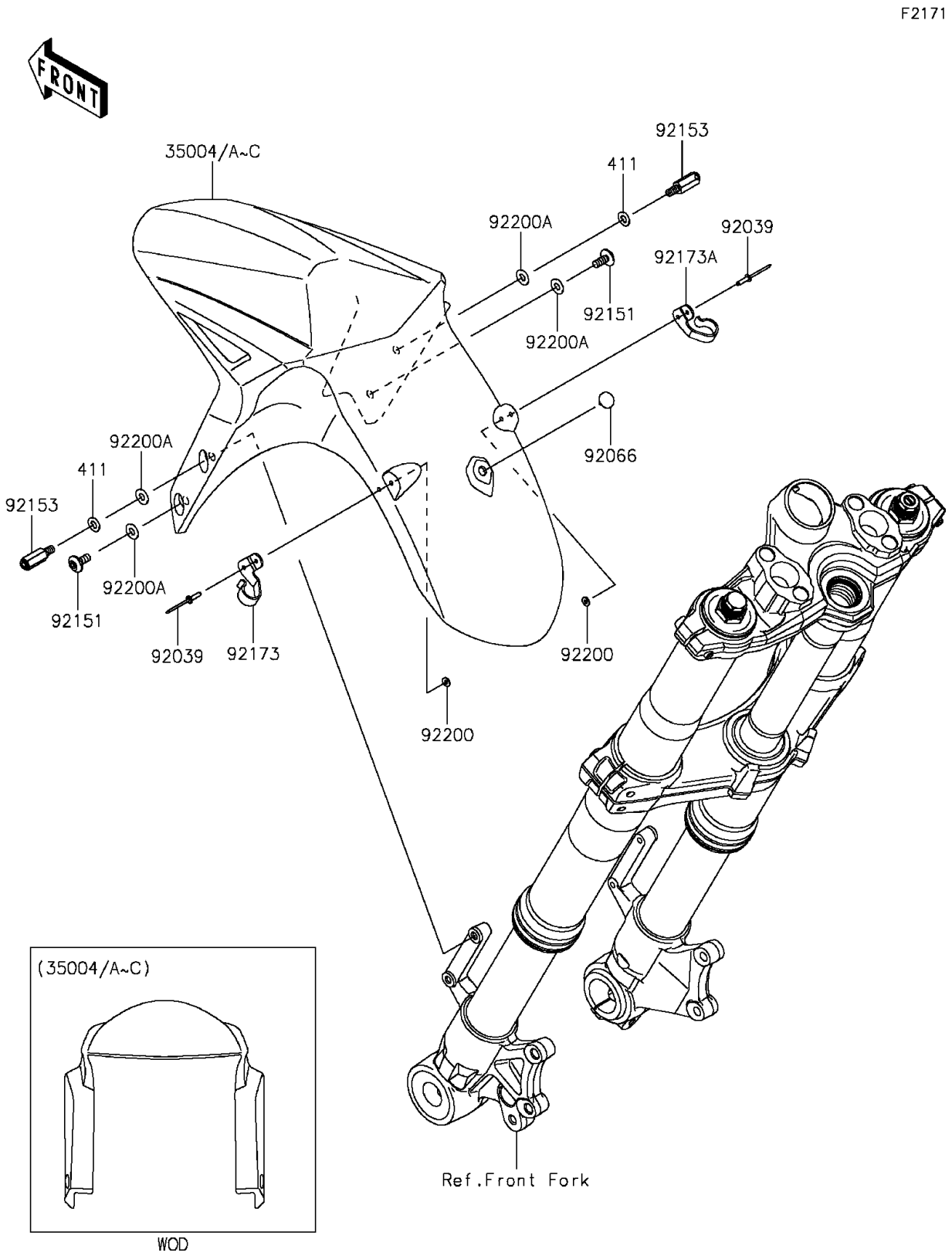

© 2026 Kawasaki Motors Corp., U.S.A.

2015 VERSYS® 1000 ABS

PARTS LIST

Front Fender(s)

ITEM NAME	PART NUMBER	QUANTITY
FENDER-FRONT,C.B.ORANGE (Ref # 35004)	35004-0340-17L	1
FENDER-FRONT,F.EBONY (Ref # 35004A)	35004-0340-45L	1
WASHER-PLAIN,6MM (Ref # 411)	411AB0600	2
RIVET (Ref # 92039)	92039-0705	4
PLUG,ANCHOR CLIP (Ref # 92066)	92066-0741	1
BOLT,SOCKET,6X14 (Ref # 92151)	92151-1654	2
BOLT,6MM (Ref # 92153)	92153-1533	2
CLAMP,FR FENDER,LH (Ref # 92173)	92173-1312	1
CLAMP,FR FENDER,RH (Ref # 92173A)	92173-1313	1
WASHER,3.5X8X1 (Ref # 92200)	92200-1251	4
WASHER,6.5X14X1 (Ref # 92200A)	92200-1388	4

© 2026 Kawasaki Motors Corp., U.S.A.