2015 Z1000 ABS

PARTS DIAGRAM

Fuel Injection

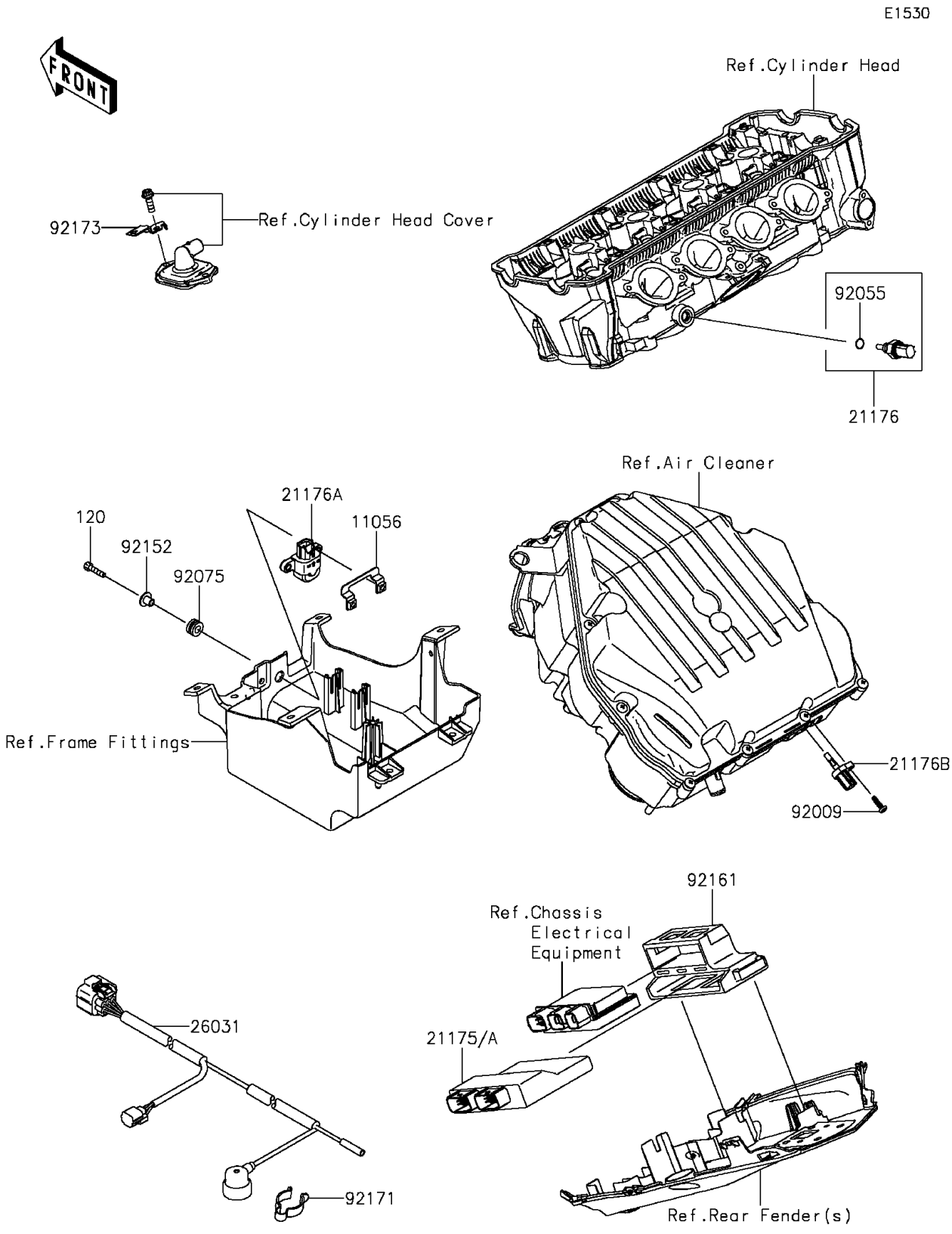

© 2026 Kawasaki Motors Corp., U.S.A.

2015 Z1000 ABS

PARTS LIST

Fuel Injection

ITEM NAME	PART NUMBER	QUANTITY
BRACKET (Ref # 11056)	11056-0124	1
BOLT-SOCKET,5X25 (Ref # 120)	120CA0525	2
CONTROL UNIT-ELECTRONIC (Ref # 21175A)	21175-0864	1
SENSOR,WATER TEMP (Ref # 21176)	21176-0009	1
SENSOR,VEHICLE-DOWN (Ref # 21176A)	21176-0026	1
SENSOR,AIR TEMPERATURE (Ref # 21176B)	21176-0048	1
HARNESS,SUB (Ref # 26031)	26031-1674	1
SCREW,TAPPING,5X16 (Ref # 92009)	92009-1984	1
RING-O,9.5X1.9 (Ref # 92055)	92055-0016	1
DAMPER (Ref # 92075)	92075-1912	2
COLLAR (Ref # 92152)	92152-0134	2
DAMPER (Ref # 92161)	92161-0356	1
CLAMP,CABLE (Ref # 92171)	92171-1283	1
CLAMP (Ref # 92173)	92173-0126	1

© 2026 Kawasaki Motors Corp., U.S.A.