2015 Z1000 ABS

PARTS DIAGRAM

Crankcase

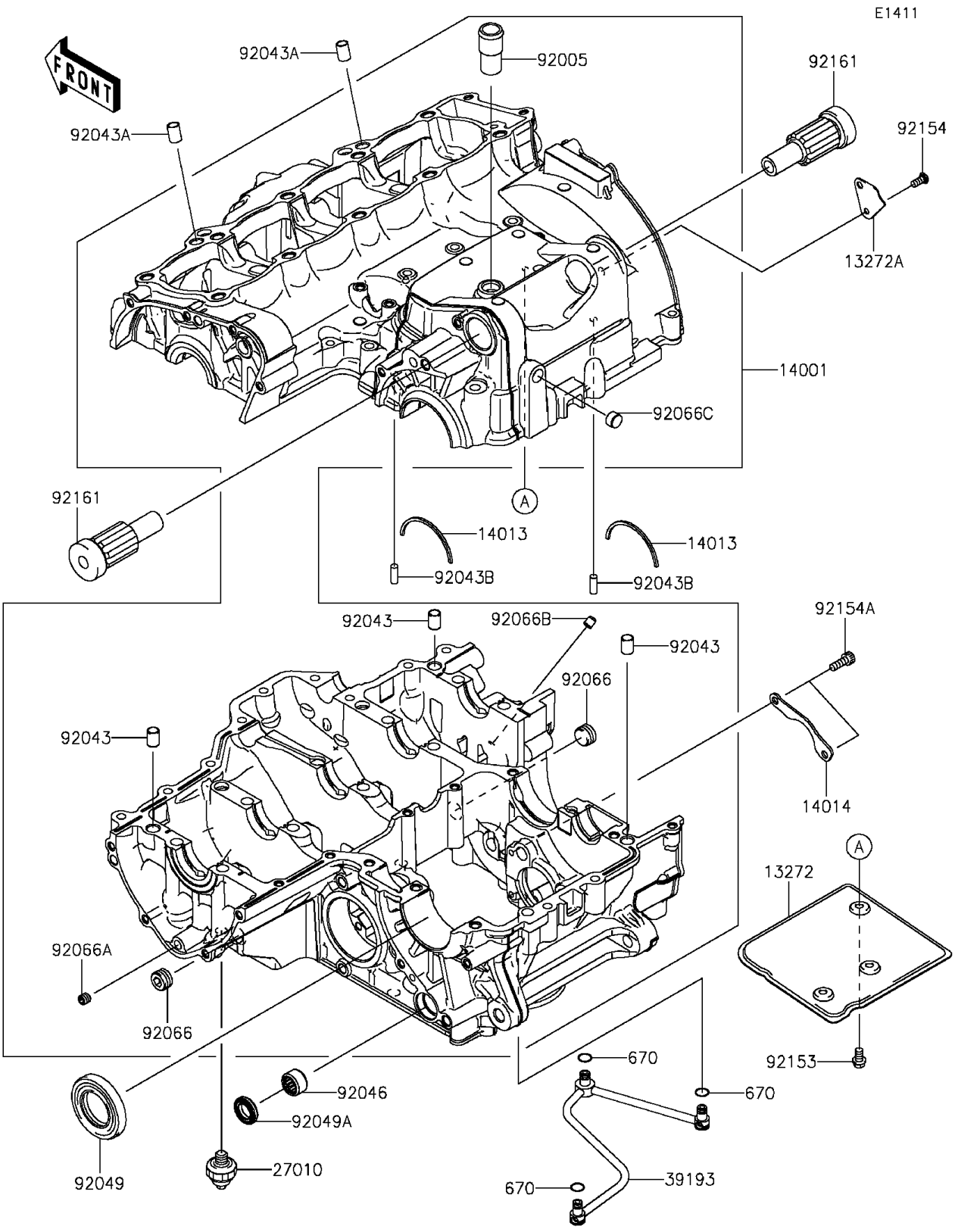

© 2026 Kawasaki Motors Corp., U.S.A.

2015 Z1000 ABS

PARTS LIST

Crankcase

ITEM NAME	PART NUMBER	QUANTITY
PLATE,BREATHER,UPP (Ref # 13272)	13272-0698	1
PLATE,BREATHER,SIDE (Ref # 13272A)	13272-0699	1
SET-CRANKCASE (Ref # 14001)	14001-0612	1
RING-POSITION (Ref # 14013)	14013-1051	2
PLATE-POSITION (Ref # 14014)	14014-0036	1
SWITCH,OIL PRESSURE (Ref # 27010)	27010-1313	1
PIPE-OIL (Ref # 39193)	39193-0054	1
O RING (Ref # 670)	670D1505	3
FITTING,BREATHER (Ref # 92005)	92005-1238	1
PIN,DOWEL,10X14 (Ref # 92043)	92043-1037	3
PIN,8.2X10X14 (Ref # 92043A)	92043-1264	2
PIN,6X16 (Ref # 92043B)	92043-1690	2
BEARING-NEEDLE,HK1412FM (Ref # 92046)	92046-0043	1
SEAL-OIL,TC32578 (Ref # 92049)	92049-1474	1
SEAL-OIL,TC14245 (Ref # 92049A)	92049-1520	1
PLUG,PT3/8X10 (Ref # 92066)	92066-0003	2
PLUG (Ref # 92066A)	92066-0158	1
PLUG,OIL LINE,7.2X8 (Ref # 92066B)	92066-1012	1
PLUG (Ref # 92066C)	92066-1110	1
BOLT,6X10 (Ref # 92153)	92153-0381	3
BOLT,TORX,5X12 (Ref # 92154)	92154-0299	1
BOLT,SOCKET,6X16 (Ref # 92154A)	92154-0484	2
DAMPER (Ref # 92161)	92161-0801	2

© 2026 Kawasaki Motors Corp., U.S.A.