2015 Z1000 ABS

PARTS DIAGRAM

Transmission

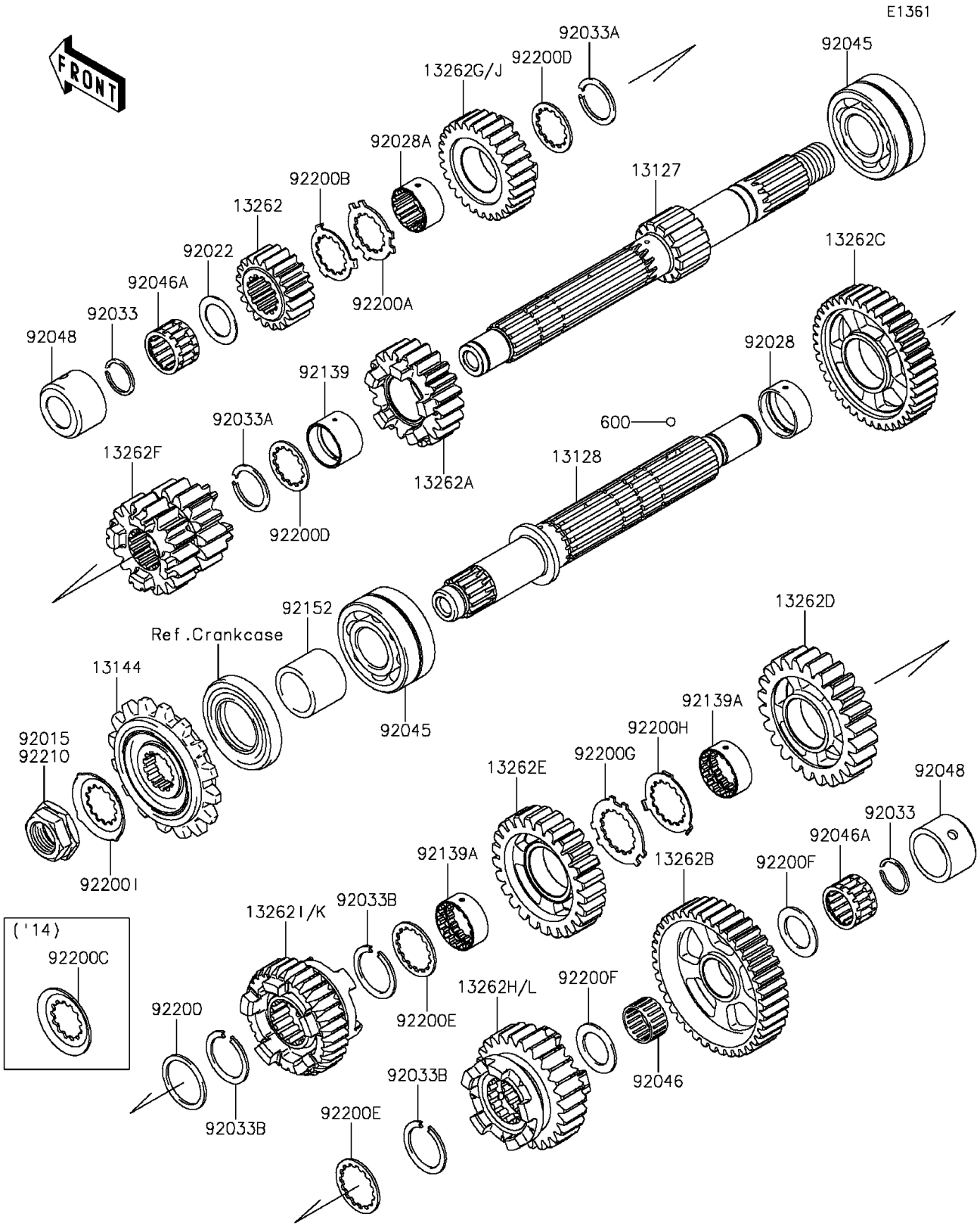

© 2026 Kawasaki Motors Corp., U.S.A.

2015 Z1000 ABS

PARTS LIST

Transmission

ITEM NAME	PART NUMBER	QUANTITY
SHAFT-TRANSMISSION INPUT (Ref # 13127)	13127-0073	1
SHAFT-TRANSMISSION OUTPUT (Ref # 13128)	13128-0054	1
SPROCKET-OUTPUT,15T (Ref # 13144)	13144-0070	1
GEAR,INPUT 2ND,20T (Ref # 13262)	13262-0753	1
GEAR,INPUT 5TH,21T (Ref # 13262A)	13262-0755	1
GEAR,OUTPUT LOW,39T (Ref # 13262B)	13262-0757	1
GEAR,OUTPUT 2ND,39T (Ref # 13262C)	13262-0778	1
GEAR,OUTPUT 3RD,24T (Ref # 13262D)	13262-0779	1
GEAR,OUTPUT 4TH,25T (Ref # 13262E)	13262-0780	1
GEAR,INPUT 3RD&4TH,15T&18T (Ref # 13262F)	13262-0991	1
GEAR,INPUT TOP,28T (Ref # 13262G)	13262-0993	1
GEAR,OUTPUT 5TH,26T (Ref # 13262H)	13262-0994	1
GEAR,OUTPUT TOP,31T (Ref # 13262I)	13262-1109	1
WASHER,20.5X30X1,STEEL (Ref # 92022)	92022-112	1
BUSHING,OUTPUT,2ND (Ref # 92028)	92028-1739	1
BUSHING,INPUT TOP GEAR (Ref # 92028A)	92028-1915	1
RING-SNAP,20MM (Ref # 92033)	92033-015	2
RING-SNAP,24MM (Ref # 92033A)	92033-026	2
RING-SNAP,T=1.5 (Ref # 92033B)	92033-1249	3
BEARING-BALL,DAC2557NSSH (Ref # 92045)	92045-0003	2
BEARING-NEEDLE,K20X24X13 (Ref # 92046)	92046-1219	1
BEARING-NEEDLE,PK20X27X17X3 (Ref # 92046A)	92046-1303	2
RACE (Ref # 92048)	92048-0016	2
BUSHING,25X28X17.8 (Ref # 92139)	92139-0280	1
BUSHING,OUTPUT,3RD&4TH (Ref # 92139A)	92139-0281	2
COLLAR,SPROCKET (Ref # 92152)	92152-0812	1
WASHER,28.1X34.0X1.6 (Ref # 92200)	92200-0228	1
WASHER,25.2X34.2X1.5 (Ref # 92200A)	92200-0520	1
WASHER,25.2X32X1 (Ref # 92200B)	92200-0521	1

© 2026 Kawasaki Motors Corp., U.S.A.

2015 Z1000 ABS

PARTS LIST

Transmission

ITEM NAME	PART NUMBER	QUANTITY
WASHER,25.2X31.0X1.5 (Ref # 92200D)	92200-1239	2
WASHER,28.5X34.0X1.5 (Ref # 92200E)	92200-1240	2
WASHER,20.5X31X1.5 (Ref # 92200F)	92200-1375	2
WASHER,25.8X40.5X1.5 (Ref # 92200G)	92200-1522	1
WASHER,25.2X37.0X1.0 (Ref # 92200H)	92200-1523	1
WASHER (Ref # 92200I)	92200-1720	1
BALL-STEEL,5/32 (Ref # 600)	600A0500	3
NUT,20MM (Ref # 92210)	92210-0850	1

© 2026 Kawasaki Motors Corp., U.S.A.