2015 Ninja 1000 ABS

PARTS DIAGRAM

Clutch(MEF/MFF)

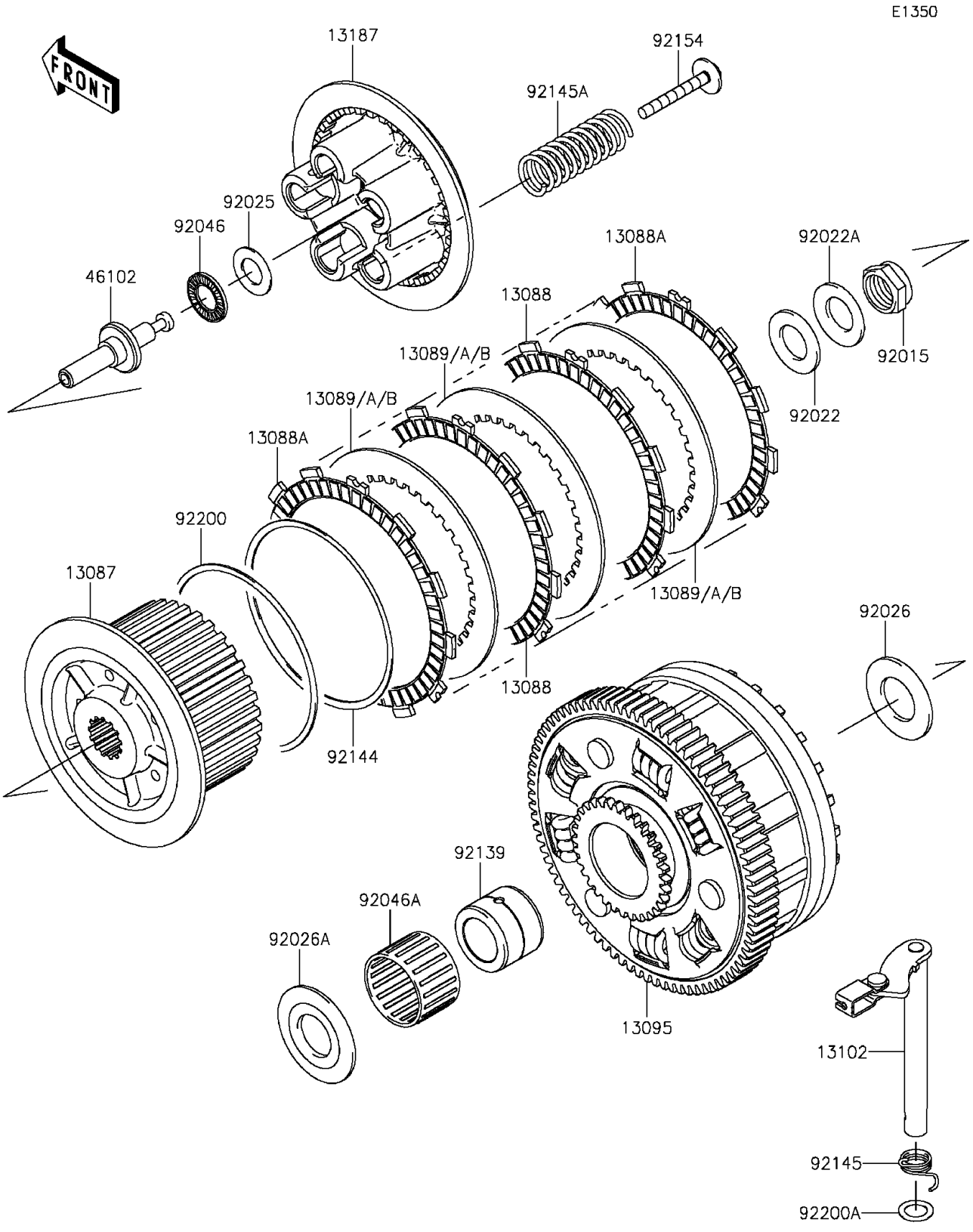

© 2026 Kawasaki Motors Corp., U.S.A.

2015 Ninja 1000 ABS

PARTS LIST

Clutch(MEF/MFF)

ITEM NAME	PART NUMBER	QUANTITY

© 2026 Kawasaki Motors Corp., U.S.A.