2008 Ninja® ZX™-14

PARTS DIAGRAM

Cylinder Head Cover

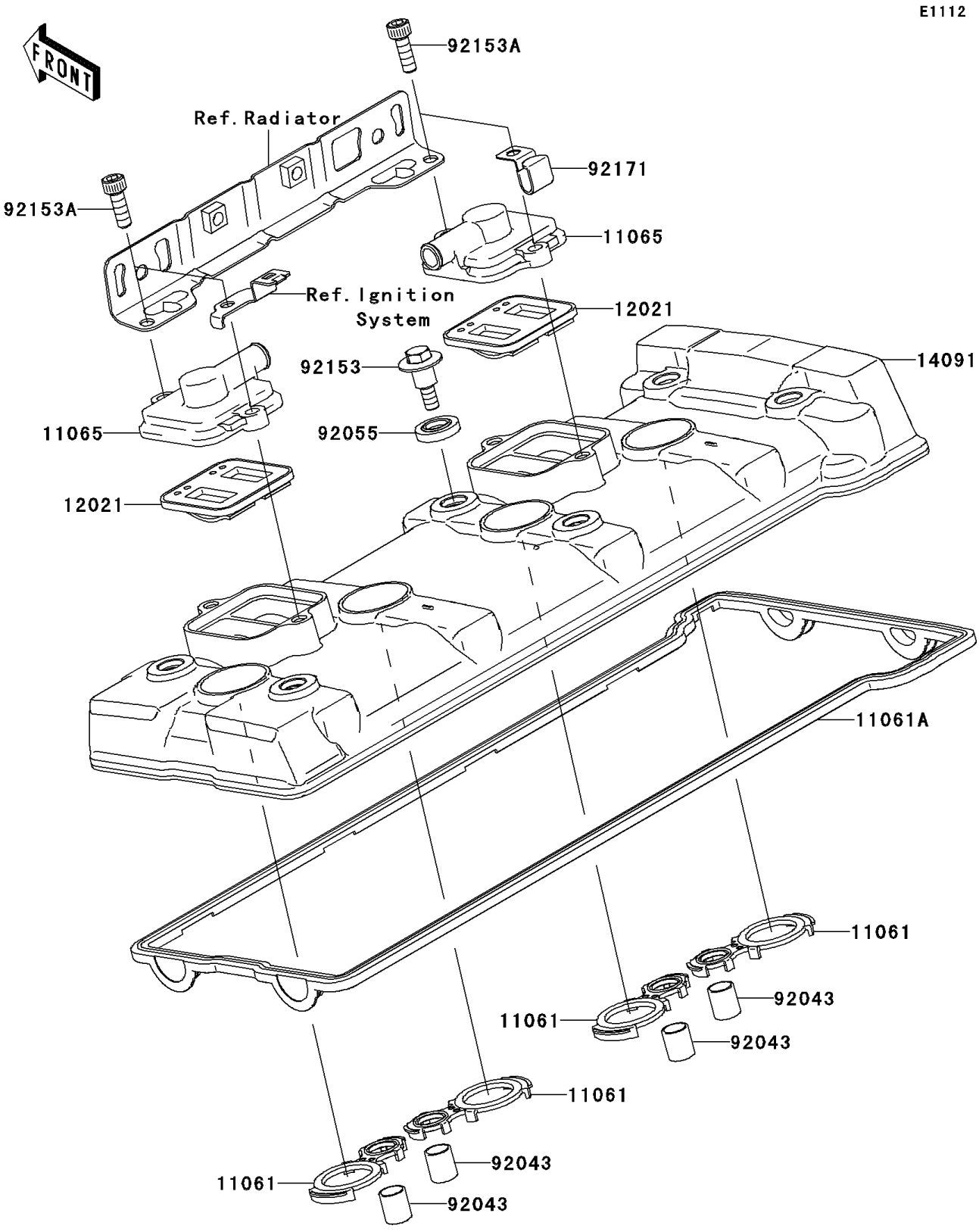

© 2026 Kawasaki Motors Corp., U.S.A.

2008 Ninja® ZX™-14

PARTS LIST

Cylinder Head Cover

ITEM NAME	PART NUMBER	QUANTITY
GASKET,HEAD HOLE (Ref # 11061)	11061-0196	4
GASKET,HEAD COVER (Ref # 11061A)	11061-0738	1
CAP (Ref # 11065)	11065-1247	2
VALVE-ASSY-REED (Ref # 12021)	12021-1130	2
COVER,HEAD (Ref # 14091)	14091-1574	1
PIN,10.1X12X14 (Ref # 92043)	92043-4009	4
RING-O (Ref # 92055)	92055-0187	6
BOLT,FLANGED,6X22.5 (Ref # 92153)	92153-1016	6
BOLT,SOCKET,6X18 (Ref # 92153A)	92153-1559	4
CLAMP (Ref # 92171)	92171-0766	1

© 2026 Kawasaki Motors Corp., U.S.A.